SERVICE MANUAL 5034

Description, Operation, and Maintenance

H-2

SEARCHLIGHT SIGNALS

UNION SWITCH
& SIGNAL INC.
A member of the ANSALDO Group

5800 CORPORATE DRIVE
PITTSBURGH, PA 15237

April, 1989
ID0202F/DN0059F
A-4/89-100-2347-1

COPYRIGHT 1989, UNION SWITCH & SIGNAL INC.
PRINTED IN USA

CONTENTS

I	GENERAL INFORMATION	1
1.1	DESCRIPTION	1
1.1.1	General	1
1.1.2	D.C. Operating Unit	3
II	INSTALLATION	5
2.1	LOCATING OF SIGNALS	5
2.2	OTHER INSTALLATION DETAILS	5
2.3	ALIGNMENT	7
2.3.1	Close-up Prisms	8
2.3.1.1	Adjustment of Close-up Prisms	10
2.3.2	Alignment on Curves	11
2.4	INSPECTION AND TEST OF OPERATING UNIT	12
2.5	MAINTENANCE	12
2.5.1	Lamps	13
2.5.2	Points to be Observed in Maintenance	13
III	MAINTENANCE	15
3.1	OPERATING COIL	21
3.2	ARMATURE ASSEMBLY	21
3.3	MOUNTING OF OPERATING COIL	22
3.4	ARMATURE BEARINGS	23
3.5	ARMATURE AIR GAPS	23
3.6	ARMATURE STOPS	24
3.7	TOP CASE, LENSES AND ROUNDELS	24
3.8	WIRING	25
3.9	REFLECTOR ASSEMBLY	26
3.10	CONTACT ADJUSTMENT	26
3.11	PERMANENT MAGNET ASSEMBLY	27
3.12	CALIBRATION	28
3.12.1	Drop-Away	28
3.12.2	Pick-Up	29
3.12.3	Reverse Pick-Up	29
3.13	INSPECTION AND SEALING	30
3.13.1	Inspection	30
3.13.2	Sealing	31
3.14	FINAL INSPECTION	31
3.15	ADJUSTMENT OF LAMP SOCKET	31
3.16	INSTALLATION OF SHIPPING SCREWS	32

SECTION I
GENERAL INFORMATION

1.1 DESCRIPTION

1.1.1 General

The searchlight type color light signal consists of an outer case which includes the lens, lens hood and signal support, and an operating unit. The outer case proper is the same for all signals, with the exception of the adapter castings in which the lenses are mounted. Two types of supporting arms are furnished for high signals. One type is designed for side of mast mounting, the center line of the signal being approximately nine (9) inches from the center line of the mast. Another type of supporting arm is furnished

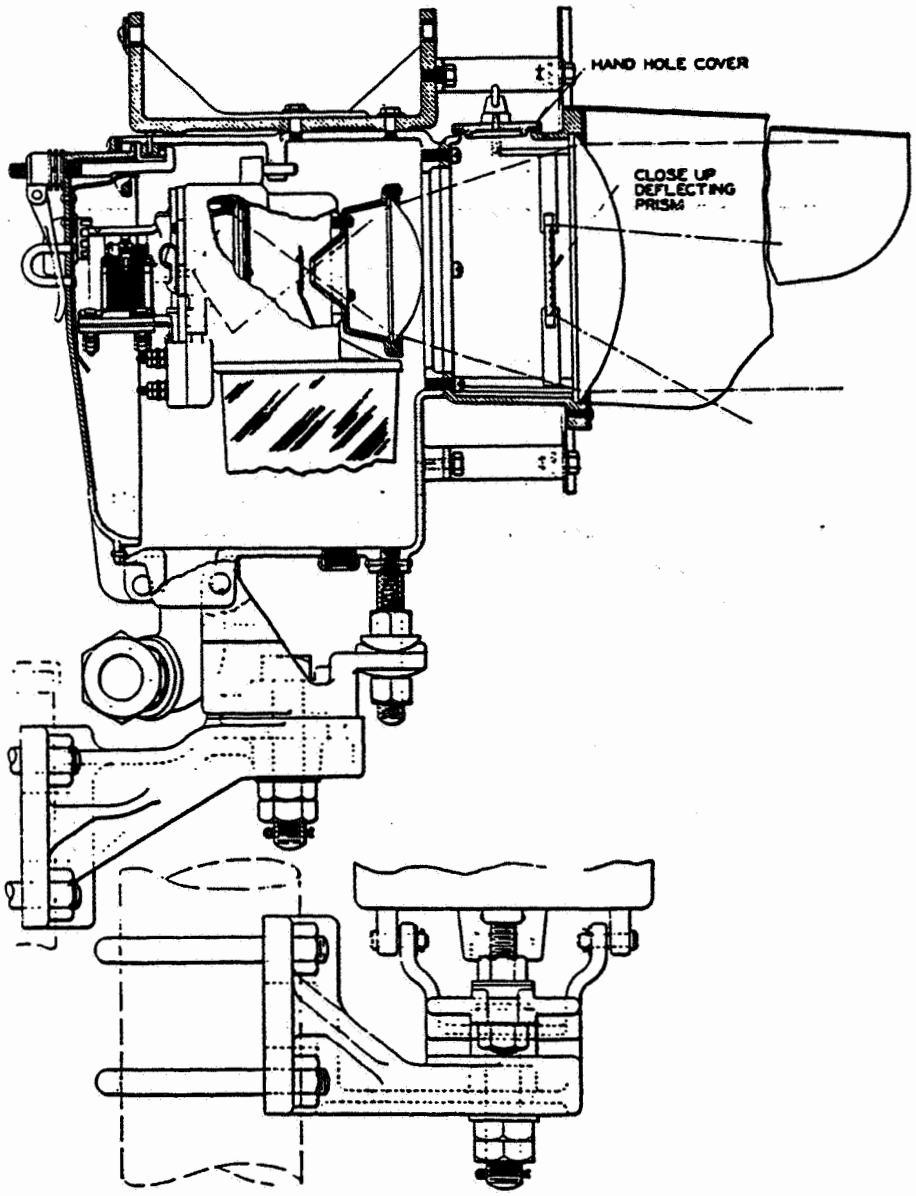

Figure 1-1. Sectional View of Case and Operating Case Illustrates Optical Principle and "Front of Mast" Mounting Lower View Shows "Side of Mast" Mounting

providing for front of mast mounting. In this case the signal is located close to the top of the mast, the case door in the open position being horizontal over the top of the mast. High signals are furnished with a background and "U" bolts for fastening the supporting arm to the mast. Each signal is equipped with a sighting device for aligning the signal.

The signal operating unit is shipped in a separate container, being carefully packed to provide against damage to the mechanism in handling. The operating unit is accurately located and fastened in the case by means of a fixed stud and two body-bound bolts. The units are interchangeable in the sense that it is not necessary that a unit be installed in a particular case, provided, of course, that the unit and case are of the same type.

The dwarf signal is the same as the high signal except that it is not provided with a background and a sighting device, and is provided with a prism cover glass designed to spread the beam upward. A 10° flat inclined deflecting glass is standard for this purpose and is mounted with the prisms on the outside and risers painted flat black. The dwarf signal is fitted with a base suitable for mounting on a flat surface such as a concrete foundation, instead of a supporting arm.

Dwarf signals are equipped as standard with an 8-3/8" diameter lens.

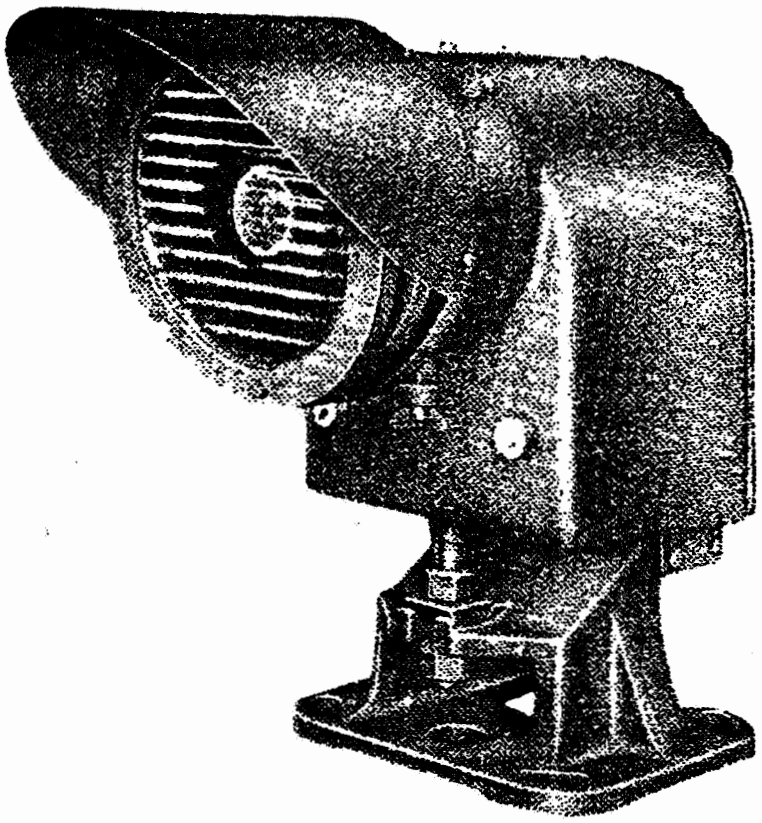

Figure 1-2. Standard Dwarf Signal, Showing the Alignment Adjustments

1.1.2 D.C. Operating Unit

The operating mechanism is essentially a three position D.C. motor relay, having an operating or armature coil and a permanent magnet field. The moving element is an iron armature which rotates approximately thirteen and one-half (13-1/2) degrees each way from the center position, at which it stands, due to counterweighting, when deenergized. Directly connected to the armature shaft is a small spectacle in which are mounted three colored glass roundels, each of one inch diameter. These roundels are moved into the concentrated light beam, as required, by the movement of the armature. In standard three color light signaling, the red roundel is located in the center and is in the light beam when the armature coil is deenergized.

Current passed through the armature coil in one direction rotates the armature against a stop to bring the yellow roundel into the light beam. Current passed through the armature coil in the other direction rotates the armature in the opposite direction against a stop to bring the green roundel in to the light beam. Thus the required change in color is effected. For two color light signaling the armature is rotated only in one direction.

The light beam is concentrated at the colored roundel location by means of an elliptical glass reflector, which, with the lamp, lamp socket and reflector holder as a unit, is inserted and held in place with spring clips in the back of the unit top case. It is a characteristic of the elliptical reflector

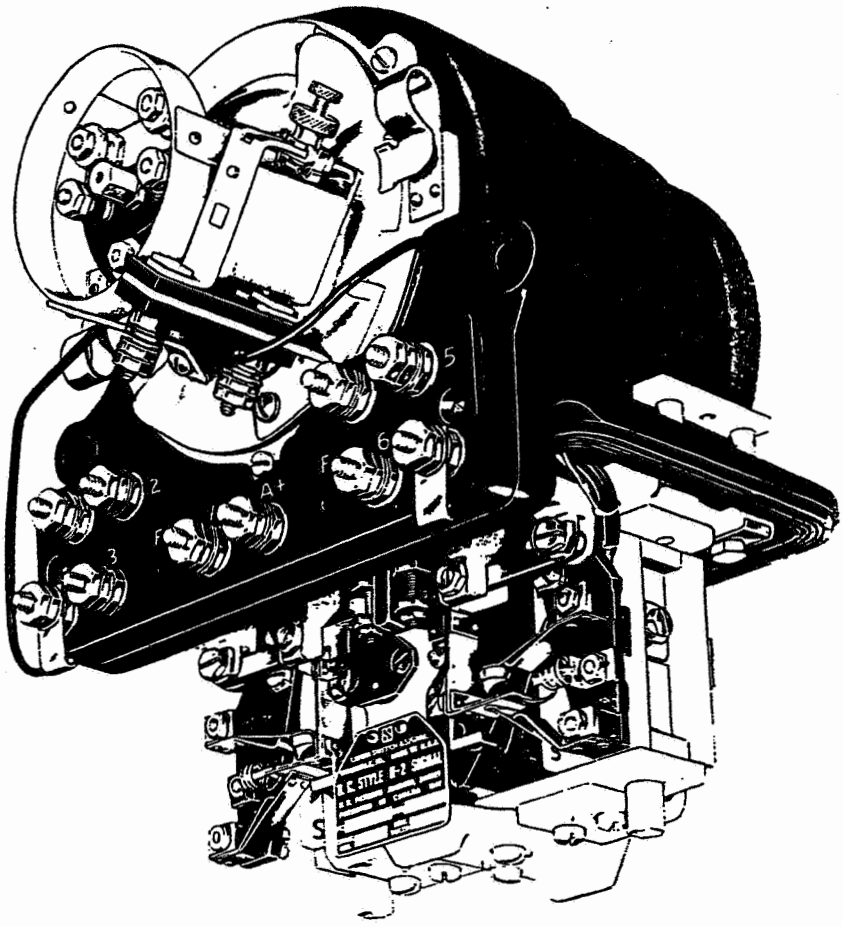

Figure 1-3. Operating Unit

that, with the lamp filament located at the focal point of the reflector, the reflected light is concentrated at the other focal point of the complete ellipse, which in this signal unit is approximatley the location of the colored roundel. After passing through the colored roundel, the diverging beam is condensed by the lens or lens system into practically a parallel beam. The lamp socket is adjusted and sealed at the factory and accurately based lamps may be placed in the socket without any readjustment.

SECTION II
INSTALLATION

2.1 LOCATING OF SIGNALS

The best location for high signals is slightly above the engineman's head and as near the rail on his side of the cab as practicable. It is therefore desirable for "side-of-mast" mounting on ground masts, to locate the signals on the track side of the mast. The supporting arm is fastened to the mast at approximately a right angle to the track, and for "front-of-mast" mounting approximately parallel to the track. If the signal is located too low, the lens hood interferes with the "close-up" view of the indication. Where a signal is located on a signal bridge, it should be mounted as low as practicable and, where convenient, approximately in line with the rail on the engineman's side. The location should be such that no part of the bridge structure interferes with the close-up view of the indication. Dwarf light signals should be located as high as is consistent with clearances and the standard practice of the railroad.

2.2 OTHER INSTALLATION DETAILS

The high signals are furnished with or without flexible conduit in accord with the requirements of the railroad. The present tendency with the railroads is toward the elimination of the flexible conduit, as the heavy rubber covered wire with braid covering can be brought directly to the operating unit terminals. When conduit is not used, the wires to the signal are laced or taped together and trained as desired. It is desirable that the wire entrance to the signal be sealed up after the wires are in place, to keep moisture and dust out of the signal. A good way to accomplish this is to fill the space around the wires, from the inside of the signal case, with oakum.

When the wires are in place, the inside of the signal case and the lens should be carefully cleaned. The operating unit should be inspected, tested and then thoroughly cleaned, particularly all exposed glass through which the light beam passes as well as the glass reflector, if found necessary. A clean cloth which does not deposit lint, dampened with alcohol, should be used to remove any grease or oily substance that may get on the lens, the glass reflector or other glass. The unit may then be fastened on the signal and wires connected. The operating unit should always be handled with care and not subjected to shock, and under normal conditions should not be opened. Where a signal is not to be immediately placed in service, it is advisable that a piece of paper be placed in front of the reflector to prevent reflected light from giving an indication.

Operating units are usually equipped with two dependent front and back contacts, and with an arrangement of binding posts, binding post designation figures, and wiring in accord with diagram shown in Figure 2-1.

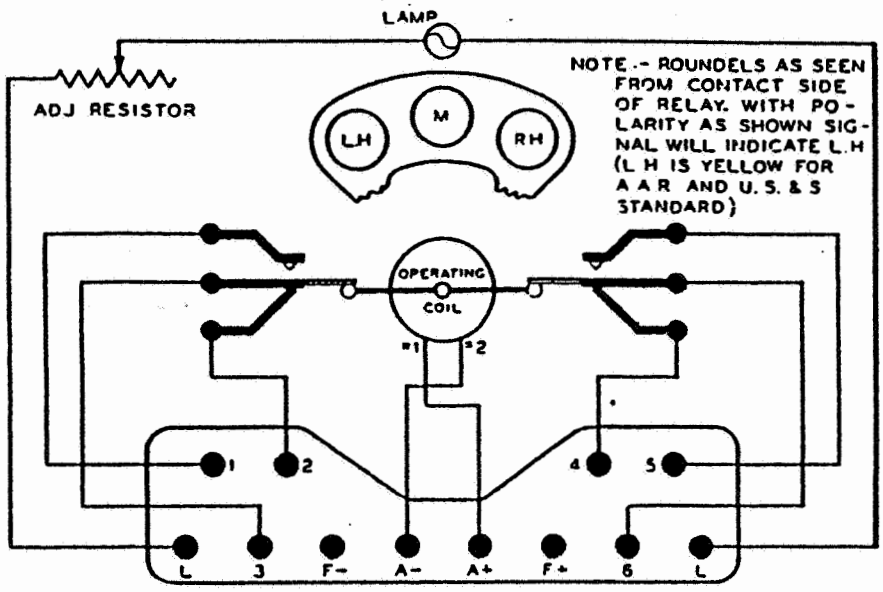

Figure 2-1. Internal Wiring Diagram

Both back contacts are closed when the armature is deenergized. The other contacts are closed only at the "yellow" and "green" positions of the relay respectively. This unit is also furnished, when so specified, with the binding posts designated with letters as shown in Figure 2-2. The operating unit is also furnished without contacts. The wiring for this unit is the same as Figure 2-1 or 2-2, but the wires from the contacts to the terminal board are omitted, and the binding post holes in the terminal board for the contact wires are closed up with dummy screws. With voltage polarity applied as shown on the wiring diagram, the armature should operate in the direction indicated.

It is important to check the voltage applied to the signal and the signal lamp when connected. The potential applied to the operating or armature coil,

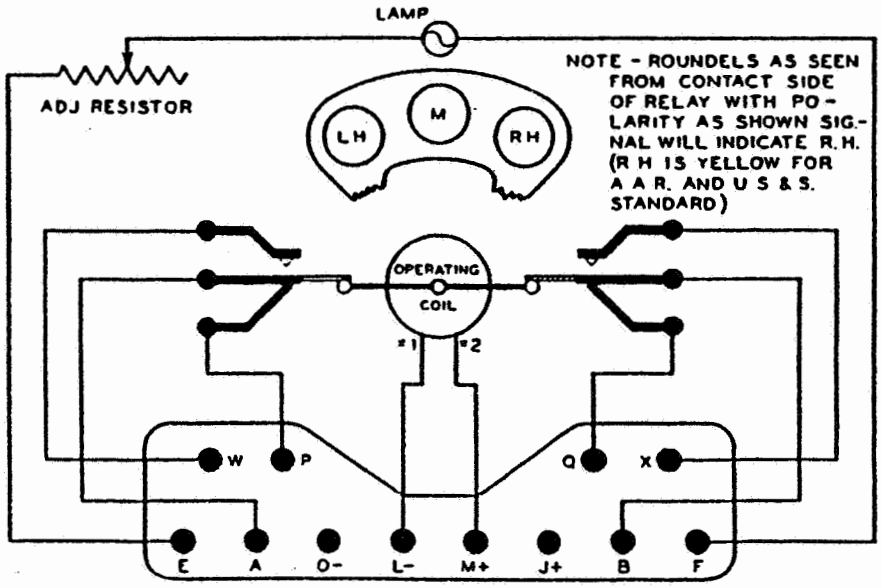

Figure 2-2. Internal Wiring Diagram (With different terminal designation and direction of armature rotation)

should not be less than the value shown on the name plate. This voltage should be measured at the operating unit binding posts. The voltage applied to the lamp, measured at the lamp terminals, should be not under 90% of the rated voltage of the lamp. Even a slightly higher voltage than the rated, materially reduces the lamp life, and a materially lower voltage reduces the candle power of the lamp appreciably.

2.3 ALIGNMENT

First align the signal horizontally; this is done on high signals by loosening jam nut B and nut A, Figure 2-3 and turning the signal on stud bolt C as an axis until the vertical cross-hair in the sighting device, located on the top of the signal case, intersects the point on the track where the engineman should first see the indication. With the signal in this position, the nut A and then the jam nut B should be tightened and the adjustment should be checked by means of the sight to make sure that it has not been changed by the tightening of the nuts. The signal should then be aligned vertically. This is done by loosening nut E and adjusting nut D upward or downward until the horizontal cross-hair in the sight intersects the point on the track where the engineman should first see the indication. Nut E should then be tightened and the adjustment should again be checked to insure that the proper alignment has been maintained. As the light beam is parallel to the sighting device on the signal case, the center line of the beam will be pointed to the selected location on the track.

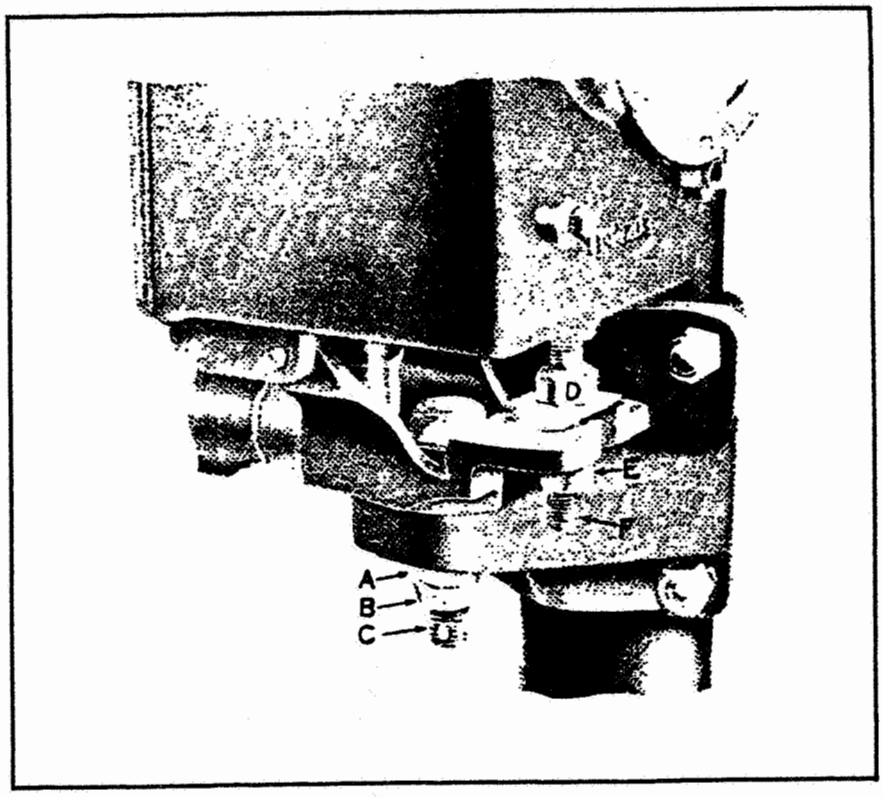

Figure 2-3. Adjustment Bracket for "Side-of-Mast" Mounting

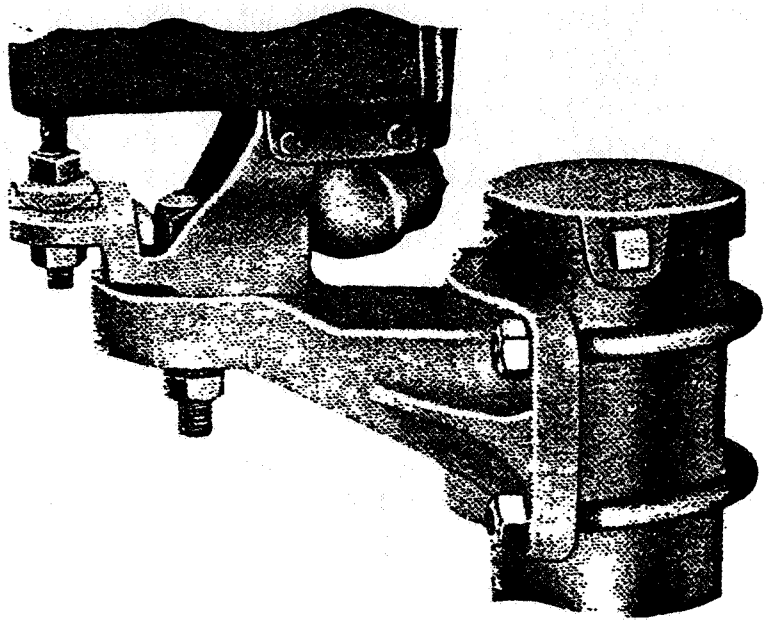

Figure 2-4. Adjustable Bracket for "Front-of-Mast" Mounting

As the required range of dwarf signals is comparatively short, a sighting device is not considered necessary. Foundation bolts should be set to give the approximately correct horizontal alignment. The base casting has slotted holes to provide for some rotation of the signal in the horizontal plane for final horizontal alignment as checked by an observer on the track. The vertical adjustment is the same as for high signals.

The operating unit should not be installed permanently in the signal until the wiring is in place and ready to be connected. One operating unit or preferably a unit top case with reflector and lamp unit, which has been properly focused, may be used to check the alignment of signals by observation from the track, where it is considered advisable.

2.3.1 Close-up Prisms

The Style "H-2" Searchlight Signals are equipped with special prisms, known as close-up prisms or "hot spot". These prisms are used to provide an indication in the line of sight of an engineman in a locomotive cab after he has passed-out of the limits of the spread of the main beam of the signal as he approaches

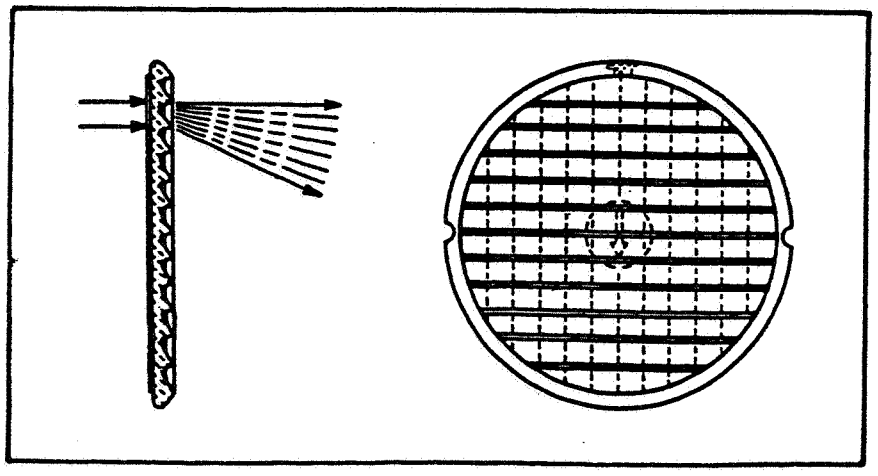

Figure 2-5. Close-up Prism

the signal. Figure 2-5 shows a close-up prism and indicates the direction the light is deflected with reference to the prismatic formations on the glass, the word "top" moulded in the rim of the glass and the arrow.

Since signals are located at various heights and distances from the track, it is impossible to adjust the close-up prism at the Factory for all conditions of installation. However, to produce the indication at a point most easily found by installation forces in the field, the prism is adjusted at the Factory to produce the close-up indication vertically downward on high signals, and vertically upward on dwarf signals. The installation forces in the field should readjust the indication to meet local conditions.

For the Style "H-2" Signal, the close-up prism, which is separate from the lens and mounted adjustably as shown in Figure 2-6, is adjusted by removing the hand hole cover and rotating the prism to the angle desired.

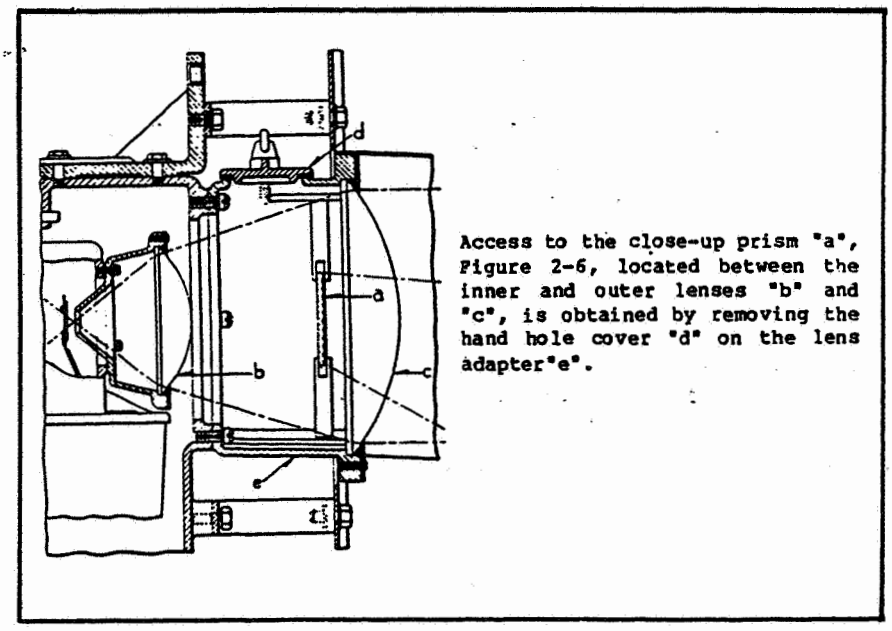

Figure 2-6. Location of Close-up Prism (H-2 Signal)

In drawf signals and high signal equipped with cover glass and "Phankill" unit, the close-up prism is located in the center of the "Phankill" screen as shown ("N, " Figure 2-7). When this assembly is added to a signal, the close-up prism furnished with the signal is removed. The close-up prism in the Style "H-2" Signal is removed through the hand hole "d", Figure 2-6. To adjust the close-up prism when assembly Figure 2-7 is used, loosen, but do not remove, the two screws "F". Rotate the entire "Phankill" unit "D" until the indication is observed at the desired point as described below and then tighten the two screws.

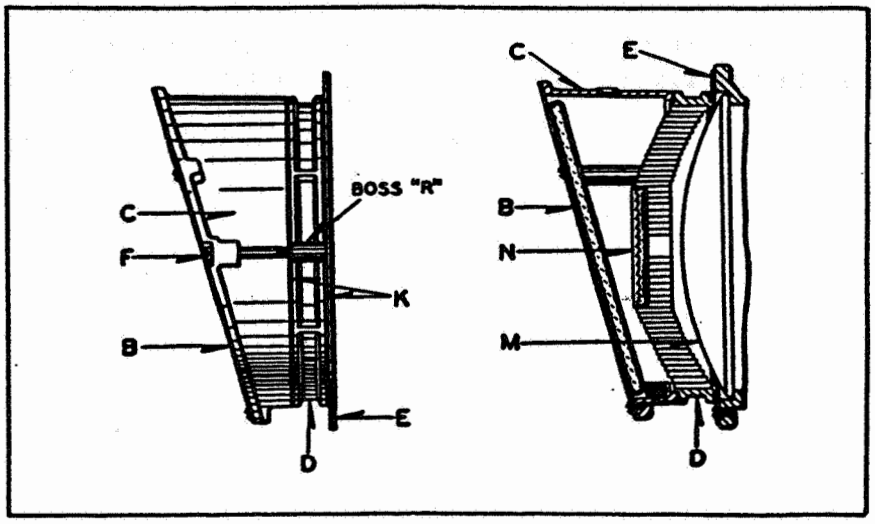

Figure 2-7

2.3.1.1 Adjustment of Close-up Prisms

To adjust the close-up indication, an observer should be stationed in a locomotive cab at a distance of 40 feet from the signal, indicated by the point "X", Figure 2-8. Signals are located at various heights and distances from the track. The location selected for point "X" in advance of the signal is satisfactory for all customary locations of signals. Point "X", located at a distance of 12 feet above the rail, is the approximate height of an engineman's eye. A special stepladder so constructed that the observer's eye is located at the point "X" may be used if a locomotive is not available. To adjust the indication, rotate the close-up prism until the maximum indication is observed at the point "X".

For ground signals located 12 feet above the rail, the close-up prism must be turned to direct the indication approximately horizontal in order to be in line with the point "X" as shown in the lower view, Figure 2-8. For other signals, located at greater heights such as the upper unit, the close-up prism will not require as much rotation from the factory setting as signals located at a lesser height.

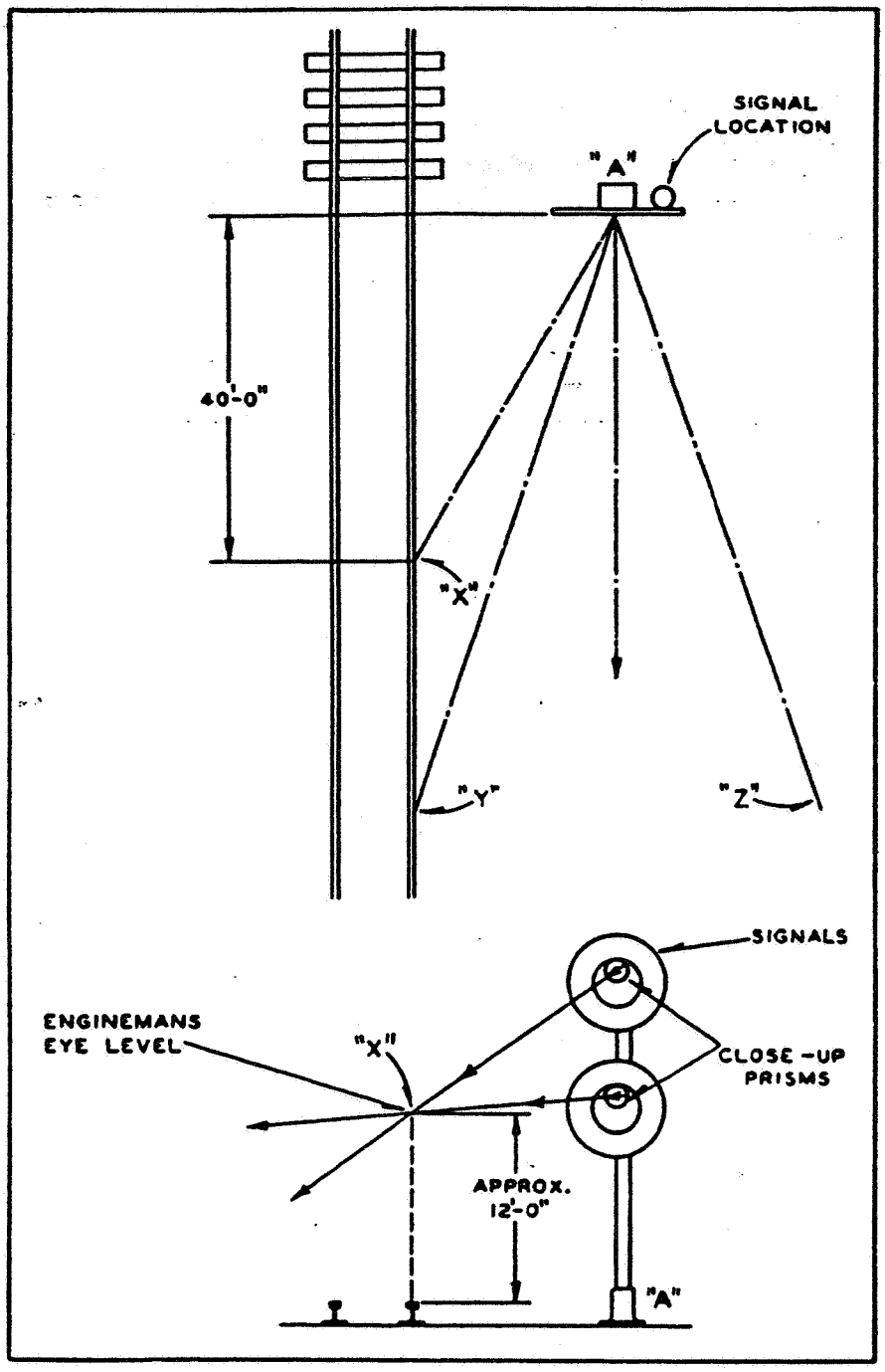

Figure 2-8

2.3.2 Alignment on Curves

Standard Searchlight Signals are designed to produce a concentrated light beam for long range indication on tangent track or track of small curvature. Special cover glasses can be furnished when additional spread of light beam is required to properly signal track of greater curvature. See Service Manual 5452 for use of these cover glasses and alignment of signals on curves.

When phankill units are furnished, they are combined with the inclined cover glass assembly shown in Figure 2-7. This assembly is mounted in front of the standard lens "M" by means of two screws "F" which are threaded into the lens

casting through holes in the special lens ring in place of the dummy screws used to protect the tapped holes. In this assembly, the cover glass is plain for tangent track and either deflecting or spreadlight for curves. In the application to dwarf signals the standard arrangement is with a 10° glass having risers painted flat black assembled to deflect light upward and with the steps on the outside.

2.4 INSPECTION AND TEST OF OPERATING UNIT

The operating unit should be given a visual inspection to see that it has not been physically damaged in shipment. Check to see that the glass cover is not cracked or disturbed or that the glass reflector or any of the glass parts are not cracked or broken. Exert outward pressure on the reflector holder, and check to see that the holding springs have sufficient tension to properly seat the reflector holder. By visual observation through the plastic cover, see that the counterweight arms and connections to the contacts are properly in place, and that clear armature air gaps of approximately 0.050" exists. Rock the unit gently sideways and see that the armature rotates freely.

2.5 MAINTENANCE

The first essential of maintenance of the signal is cleanliness. The case door should be kept tightly closed, except when necessary to open it, to keep all dust, rain, snow, etc. out of the signal. It will therefore usually be only necessary to clean the outside surface of the lens occasionally as the conditions of the atmosphere, etc. require. If dust or foreign material collects on the reflector or glass through which the light beam passes or on the inside of the lens for any reason, it should, of course, be cleaned off. Cleaning of glass should be done as outlined under Installation Details (Section 2.2). To clean the inside of the lens or the glass on the lens side of the unit, it is necessary to remove the unit from its mounting and tip it forward.

Except in cases of emergency, we recommend that the operating unit not be opened in the field. If, for any reason, the unit is thought not to be in proper operating condition, we recommend that it be replaced by a spare operating unit and sent to the railroad repair shop or to our factory for investigation and repair.

Periodical inspection should be made of the colored glass roundels to see if they are properly in place or broken. Inspection of the colored roundels may be made by removing the reflector holder and observing the roundels through the glass at this location. Occasionally a roundel will crack due to a strain set up in the glass on account of the intense heat of the concentrated light beam. The roundels, however, are made from special heat resisting glass to withstand this heat. A simple crack through the glass is not considered objectionable as the small retaining ring around the edge will hold the parts in place. If, however, a double crack should occur or a small piece break out, allowing white light to pass through, the roundel should be replaced. Conical roundels are made in one piece and have very little tendency toward breakage from heat absorption. If in emergency, it is found necessary to change a roundel in the field, this may be done without disturbing the working parts of the unit, by removing the ring in which the reflector holder is

seated. This ring is held in place by three screws entering the unit top case, one of which is sealed with a lead seal. The joint between this ring and the top case is sealed with a thin coating of a special black sealing compound, Class 3, Spec. 3414, (A041426), and should be resealed when the ring is replaced, care being exercised in handling so that no particles of sealing compound or other foreign matter gets into the unit. Care should also be taken, in replacing roundels, not to bend or distort the small spectacle which supports the roundels, as clearance between this movable element and other parts is important.

Considerable accuracy is required in the adjustment of the lamp socket with respect to the reflector to insure that maximum efficiency and proper alignment with the sighter are obtained. Replacement of the reflector alone, in signals where the reflector has been broken, does not insure that best results will be obtained and for this reason only two methods of replacement are recommended. Replacement of the reflector holder complete with a reflector holder adjusted at the factory, or returning the complete operating unit to our factory where the lamp socket can be re-adjusted.

The unit armature is pivoted on specially constructed knife-edged bearings. As no oil should ever be used on these bearings or other pivots of the unit, there is normally no occasion to open the unit.

2.5.1 Lamps

Lamps furnished by US&S for the searchlight type signal are based with the filaments accurately located with respect to the pins in the base. It is obvious that when such a lamp is installed for replacement, the signal indication will remain the same as before. If non-precision lamps, having filaments appreciably off the true location, are used, not only will the signal indication be impaired, but the alignment of the light beam may not be parallel to the sighting device on the signal and therefore not pointed in the direction indicated. For best results, therefore, it is desirable that accurately based lamps be used.

The lamps used in the "H-2" Searchlight Signals are of the S-11 bulb, candelabra bayonet base, C-2 filament, single contact, 1/64" precision type.

For information on lamps and handling of lamps see Service Manual 5037 on "Life, Installation and Replacement of Railway Light Signal Lamps".

2.5.2 Points to be Observed in Maintenance

NOTE

> The H-2 Searchlight Signal mechanisms should be inspected at least once every six months where unusual conditions exist such as operating the mechanism on bridge structures or other high vibration areas. In addition, a complete test of the operating characteristics of all parts shall be made at least once every two years.

1. Replacement of broken lenses in the field should be avoided if at all possible. Due to variations in lenses, proper results in efficiency and alignment are obtained only by returning the signal to the factory or to a specially equipped railroad shop for optical adjustment. The glass reflector if damaged should not be replaced, but the entire reflector assembly may be replaced without much loss in alignment or efficiency.

2. Using a lintless cloth, clean both surfaces of each of the lenses by removing the operating unit and hand-hole cover, being careful not to disturb the adjustment of the close-up prism. Clean the windows in the operating unit, and clean both the reflector and lamp bulb, without removing the lamp.

3. To install a lamp in the lamp socket, insert the lamp base into the socket as far as it will go, then turn the lamp clockwise as far as possible, then pull out until the pins in the lamp base are properly seated in the pin seats in the socket.

4. Lamp voltage should be checked periodically and re-adjusted, if necessary. For further information on lamps, see Service Manual 5037 on "Life, Installation and Replacement of Railway Signal Lamps".

5. Tests should be made of the operating unit to determine pick-up and release values and to detect any improper operation. In case of trouble replace the unit and send the defective unit to the repair shop for inspection and test per Section III.

SECTION III
MAINTENANCE

The purpose of this section is to assist shop personnel in the overhaul and repair of "H-2" operating units that have been removed from service.

NOTE

> It is recommended that the "H-2" signal mechanisms be inspected at least once every six months where unusual conditions exist, such as operating the mechanism on bridge structures or other high vibration areas. In addition, a complete test of the operating characteristics of all parts should be made at least once every two years.

This specification provides instructions for the repair of all units. Ordinarily it will not be necessary to dismantle a mechanism unless replacement of the operating coil or repairs to a damaged frame structure is required.

The plastic cover is held in place by means of a supporting strap. Before removing the cover from the unit, it is necessary to break the lead seals on each side, slide off the sealing plates, extract the exposed tightening screws and unhook the supporting strap.

Since fixed air-gaps and non-aging iron are used in the magnetic structure, the items most likely to affect the proper working of the operating unit are as follows:

1. Condition of the knife-edge bearings.

2. Presence of foreign particles lodged in the clearance between the armature assembly and stationary parts of the unit.

3. Friction in the pivots.

The calibration test will quickly indicate the presence of dirt or friction in any part of the unit. Vertical air gaps between the fixed pole pieces Y and movable pole shoes V, Figure 3-1, are nominally set at 0.050 inch (with limits of 0.048" to 0.056") and are located to permit visual inspection or checking with a thickness gage. Clearance around the armature shaft A (Figure 3-2), where it passes through coil J can be checked by removing the knife-edge bearing from one end of the unit, thereby allowing movement of approximately 3/64 inch from the center position.

Style "H-2" Unit
(Plano Convex Lens)

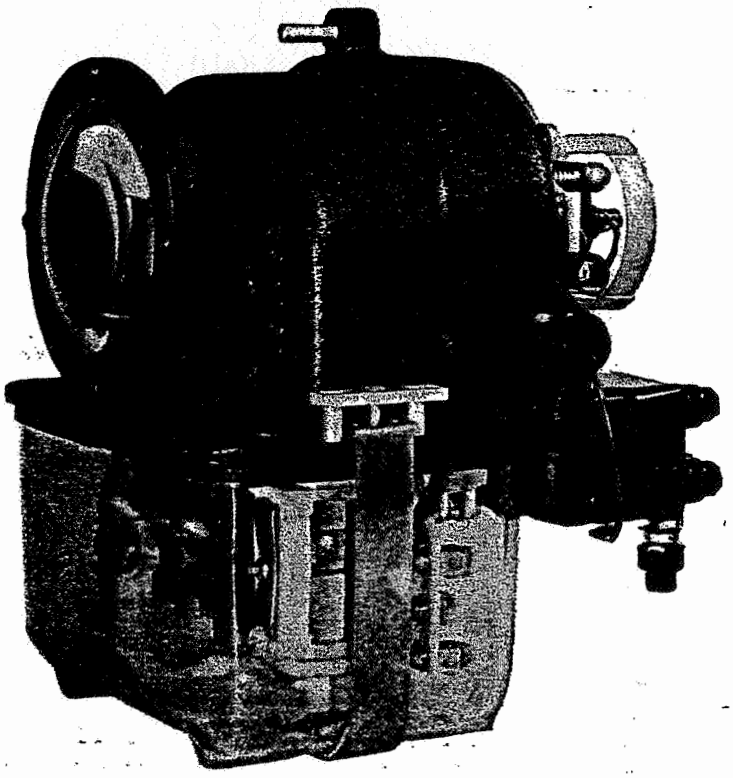

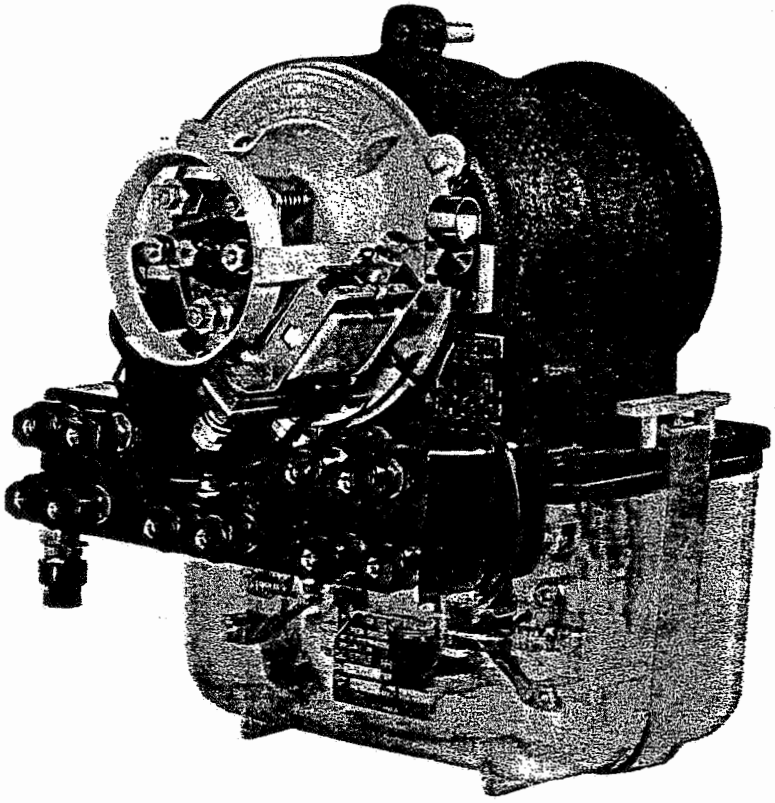

Style "H-2" Unit
(Complete with Plug Coupler)

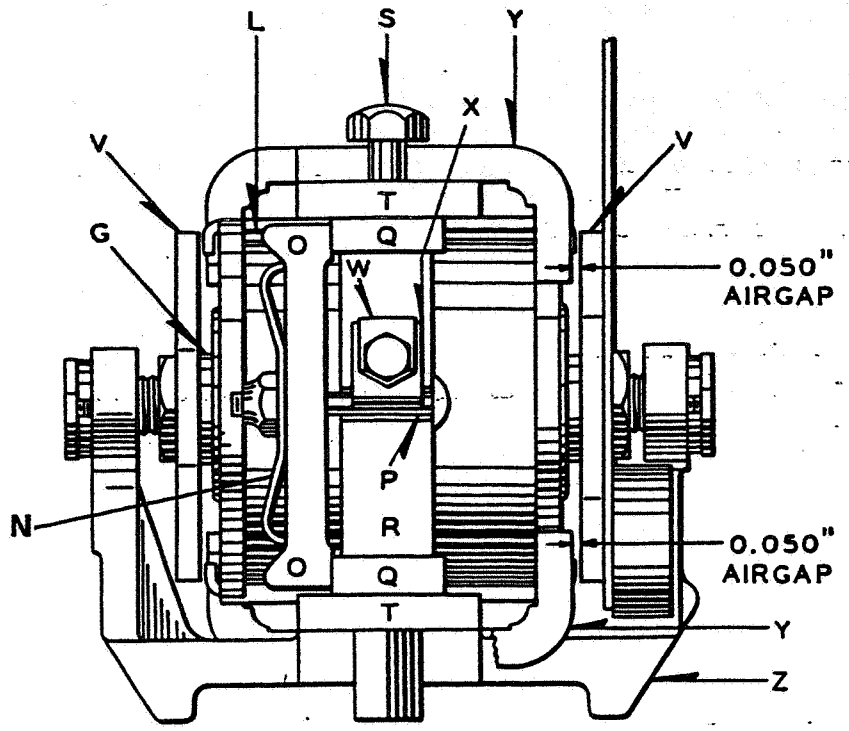

Figure 3-1. Side View of Operating Mechanism

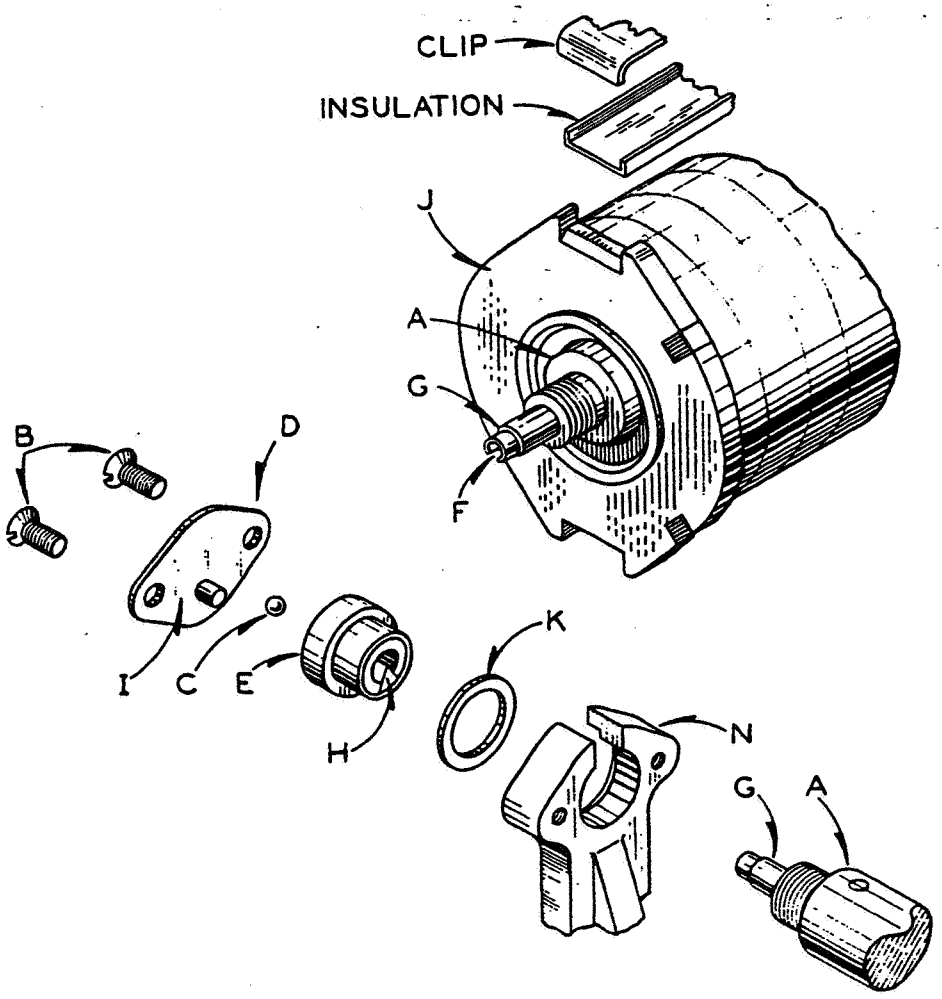

Figure 3-2. Exploded View of Knife-Bearing Assembly

If dismantling of any part of the unit is required, first remove permanent magnets O (Figure 3-1) from the frame, to prevent the attraction of filings or other particles of iron to the magnetic structure. Removal of the magnet on each side is accomplished by first releasing the nut lock W and removing clip X (Figure 3-1) on spacer block R. Next, loosen the stop nut on the end of screw P which holds the magnets in place. Finally, slide the magnet complete with clips N and bolt P from pole pieces Q by means of the horizontal slot in field spacer R. When permanent magnets are removed from the unit, they should be placed together in pairs with unlike poles together and stored in a clean covered box or carton to keep clear of fillings or iron particles. To assist in identifying the poles of the magnets, the end which attracts the South seeking end of a compass has been marked with a letter N. The condition of the charge on these magnets is an important factor in the proper operation of the unit. (Please refer to Section 3.10 for instructions to be followed in checking the magnets.)

The next step in dismantling the unit is removal of the top case from the mechanism. First, disconnect the two lamp socket leads F from the terminal board A (Figure 3-3). Next, remove the reflector assembly complete with its retaining ring E from top case C by taking out three screws G. Break out the wax seals over the fastening screws and remove terminal board A from the top case. Then loosen the binding posts and disconnect all wires from the back of the terminal board. Finally, remove four screws B which allows the top case to be separated from the mechanism. (Two of these screws B are reached from below, while the other two are reached from above through the large opening where the reflector assembly retaining ring E was located.)

The knife edge bearing may be opened for inspection and cleaning by removal of bearing caps D (Figures 3-3 and 3-2) which are fastened with two flat head screws B (Figure 3-2), the heads of which are flush with the surface of the cap. When bearing caps are removed, care must be taken not to lose the steel ball C which is located in the end of shaft A. The steel ball should be handled with tweezers. Knife edge assembly E, bearing cap D, and the steel ball C should be cleaned with benzine and immersed in a covered container of Union Oil A041220 immediately after removal from the unit. For this purpose use only fresh uncontaminated oil, as the immersed parts can rust if placed in a covered container of contaminated oil. The front and back bearings should be marked and kept in separate containers with their respective spacer shims K placed in order to simplify reassembly in the unit. Inspection should be made of the shaft and knife edge bearings for freedom from dirt or rust, particularly in groove F, the large diameter of shaft insert G, knife edge H of bearing E and the inside surface I of cap D. All of these parts are made of special material, accurately machined and finished and hardened to withstand wear. Surfaces of parts moving adjacent to or in contact with each other require a smooth finish. Any slight roughness found on the knife edge H or in the groove F of the shaft insert may be removed by slight honing of the surface involved. Such treatment should be given before the cleaning and immersion in oil. If the shaft is dirty or rusty, it is necessary to take the frame structure apart to remove the armature for cleaning and polishing. The polished surfaces should then be given a coat of Union Oil A041220. The excess oil should be wiped from the oiled surfaces with a clean dry lintless cloth.

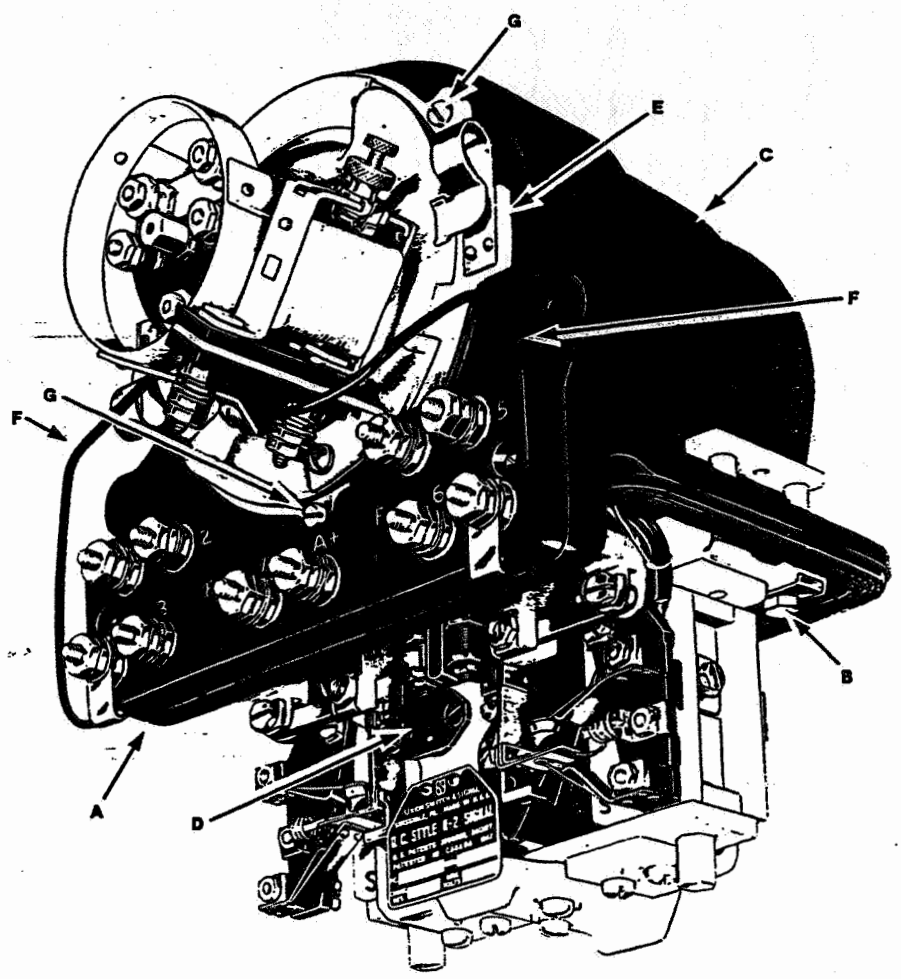

Figure 3-3

To separate the armature and operating coil from the frame of the mechanism, remove the two hexagonal head screws S (Figure 3-1) which hold backstrap T and field pole pieces Q to spacer R. The contact and counterweight arm supporting brackets U (Figure 3-4) are doweled to upper backstrap T. The contact assemblies and counterweight arms F (Figure 3-4) are fastened to these brackets. Thus, the upper portion of the mechanism consisting of back strap, contacts, counterweight arms and their supporting brackets may be separated from the top of the mechanism as a unit, simply by removing screws S. With the bearings and caps already removed, the armature assembly consisting of armature G, pole shoes V and coil L (Figure 3-5) may be lifted out of the mechanism. When removing the coil from its clip mountings, the channels of insulation on the clips should be examined for lightning damage. The insulations may be reused when the mechanism is reassembled, if found in satisfactory condition.

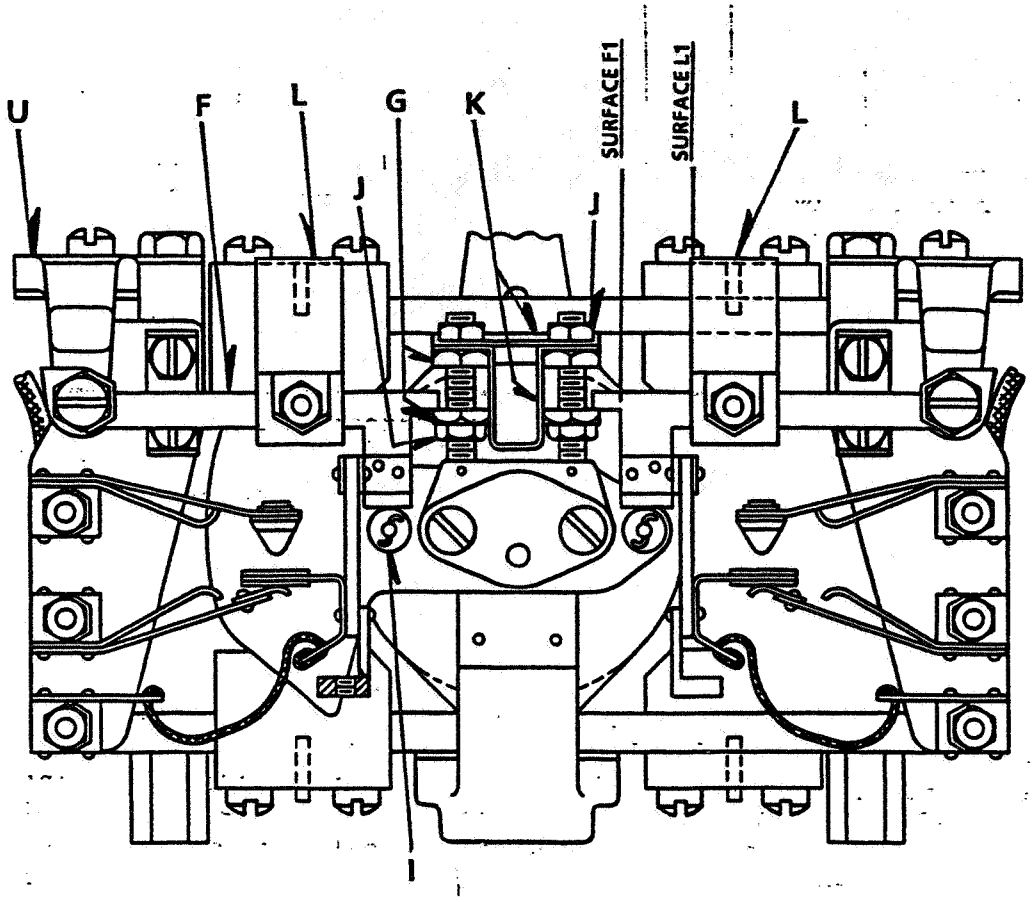

Figure 3-4. Contact Assembly

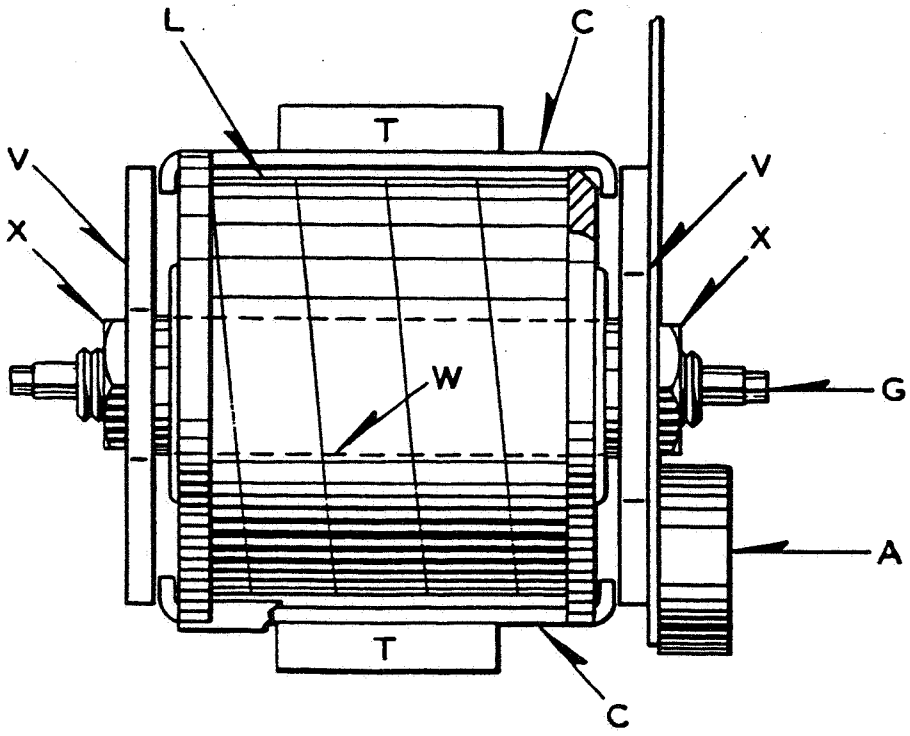

Figure 3-5. View Showing Armature Assembly and Method of Supporting the Operating Coil

To remove the coil from the armature assembly (Figure 3-5), detach one of the pole shoes V which is held in place against iron core W of shaft G by means of nut X and kept in accurate relationship to the shaft by two dowel pins. Nut X is also prick punched into the threads of shaft G to make it non-turning. Remove nut X and exert outward pressure on pole shoe V, taking care that the two dowel pins are not bent or lost. Coil L may now be slipped off shaft G.

Dowel pins are also used to maintain the accuracy of the location of fixed pole pieces Y and backstraps T (Figure 3-1) and between armature bearing bracket Z and lower backstrap T. Unless it is necessary to replace the armature shaft, there should be no occasion to take these joints apart. If the armature shaft is replaced, in order to properly realign and adjust the air gaps, it will be necessary to remove the dowels from the joints between all fixed pole pieces Y and backstraps T. After such readjustments these joints must be redoweled as described in Section 3.5. In assembly of the mechanism, great care has been exercised in the accurate location and holding together of the parts which are involved in maintaining a fixed parallel armature air gap.

3.1 OPERATING COIL

When replacing the operating coil, the coil, head, copper tube, and leads should be carefully checked for cleanliness and that all excess impregnating compound has been removed. This check is very important and is to insure against foreign particles getting into the working mechanism.

Coils have been wound on copper sleeves with heads spun on. The procedure for assembly to the mechanism is discussed in Section 3.3.

3.2 ARMATURE ASSEMBLY

When the armature of the earlier manufactured units is completely assembled with spectacle and roundels in place and doweled, it is balanced by filing away a portion of the lead counterweight A (Figure 3-5) if necessary. While balancing the armature, the grooves in the armature shaft should rest either on horizontal knife-edge bearings or cone points. Two conical points of small angle, as illustrated in Figure 3-6, may be used for this purpose. The use of conical points will eliminate the necessity of careful alignment and requires only that both points be kept sharp and in the same horizontal plane. Later design assemblies had plated brass fixed counterweights which did not require balancing as did the earlier assemblies.

With the armature resting on two cone points, the lead counterweight may be filed to give the proper balance. When correctly balanced, the lead weights will slightly over-balance the spectacle and cause the armature to come to rest with the center roundel in a vertical position. This slight over-balance should be of such magnitude that a 14.5 grain weight, when clamped above the center roundel, will result in a balanced condition where the spectacle will remain in any angular position that it may be placed.

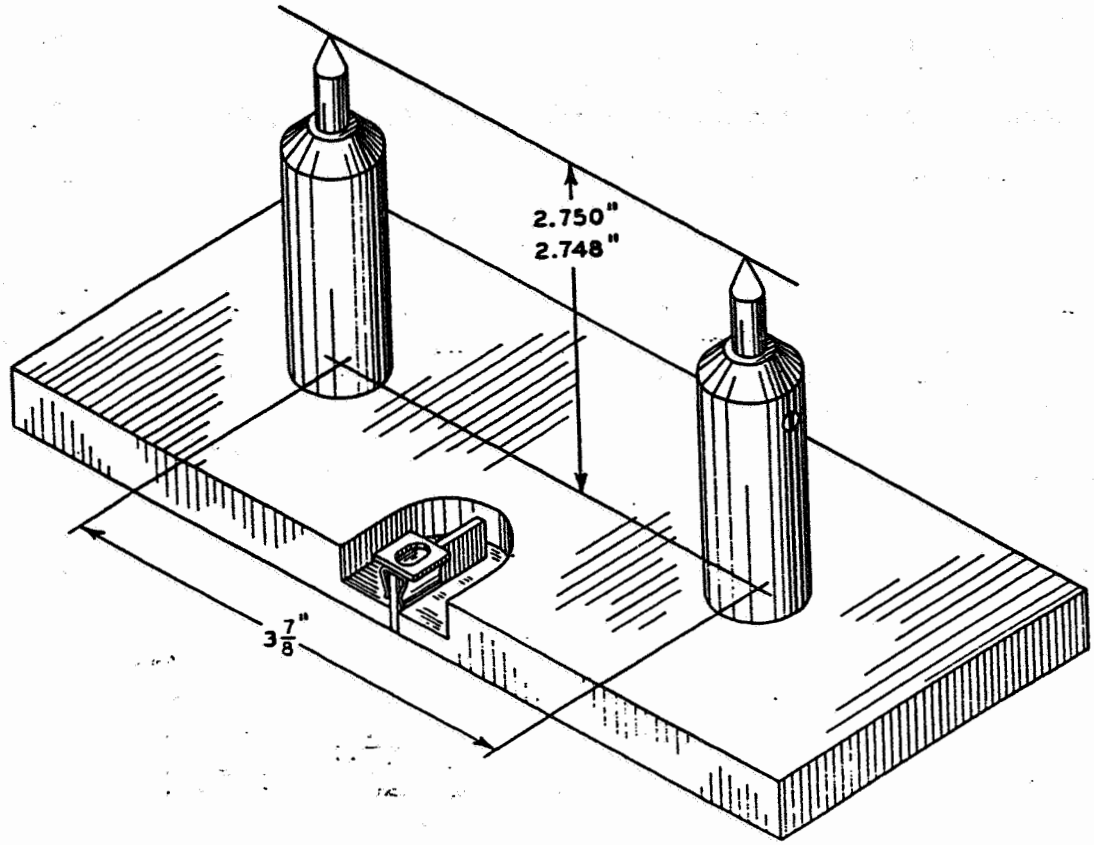

Figure 3-6. Fixture for Use in Balancing Armature

3.3 MOUNTING OF OPERATING COIL

The operating coil should be mounted and adjusted to its mounting supports with the channel insulation in place on the clip before the coil is assembled on the armature core. Replace any defective insulations which were removed when the unit was dismantled. It should rest in its lower support in such a position that the armature core is exactly centered with the hole in the spool and equal clearance all around the core. The top coil support C (Figure 3-5), should clamp coil L in this position when top backstrap T is fastened in place.

The correct location of the coil with respect to the armature core can best be obtained by placing inside the coil a 2-3/4 inch long sleeve with an outside diameter of 0.788 inch and an inside diameter which will just slide over a 9/16 inch diameter round rod. This rod must be long enough to extend through bearing holes in both ends of bracket N (Figure 3-2). With the parts thus assembled, the rod should turn without binding. The height of the coil may be adjusted by bending the supporting clips C or by slightly filing the notches in the end of the spool J (Figure 3-2) in which the clips engage.

When the operating coil has been properly located, the coil should be reassembled on the armature core and the armature pole piece fastened in place. The armature, operaing coil and knife edge bearings are then assembled in position. When fastening the top back strap and field pole piece to the field spacer, care should be taken to keep the faces of the pole pieces attached to the top and bottom back strap in the same plane on each side in order to secure parallel air gaps.

3.4 ARMATURE BEARINGS

When the mechanism is ready to have the bearings reassembled, remove the bearing parts from the oil by use of tweezers and together with the shaft inserts G (Figure 3-2), thoroughly wipe away the excess of oil with a chamois or other suitable material which will not deposit particles on the surface. Just before placing them in the unit, wash the steel balls C in benzine and then dry between clean cloths. After drying, the steel balls should not be touched as moisture from the hands may cause them to rust. It is best to use small tweezers at all times for handling the steel balls.

In assembling the bearing, little difficulty will be encountered in restoring them to their original position if the individual bearings had been marked when they were removed and the parts stored together with the spacer shims. With the bearing in place and the grooves in the shaft resting on the knife edges, the clearance between the large diameter of the shaft insert G and the inside surface of the bearing E should not exceed 0.012 inch nor be less than 0.003 inch.

After both bearings have been installed, the scribed line on the bottom of each bearing must be carefully lined up with a similar scribed line on the bearing bracket. This is to assure the proper positioning of the knife edges H. The steel balls C are then inserted in the ends of the shaft and the caps D attached. There is a small pin attached to the inner surface of cap D which fits into a slot on the inner surface of bearing E and maintains it in its proper position. The end play of the armature should be tried only when screws B are carefully tightened. This end play may be adjusted by adding or removing shims K between the shoulder of bearing E and the bracket N and should be 0.005 inch.

3.5 ARMATURE AIR GAPS

The air gaps, shown in Figure 3-1, are nominally 0.050 inch, approximately parallel, and are measured with the armature shaft resting on both bearings. Separate checks shall be made for both full stroke positions of the armature as follows:

A. With the end play taken up in one direction by holding the movable pole shoe as close to the fixed pole piece as the end play permits, the air gap shall not be less than 0.048 inch at any point.

B. With the end play taken up in the opposite direction, the air gap shall not be greater than 0.056 inch at its closest point.

These checks should be made on both ends of the armature.

Should repairs to the armature assembly (Figure 3-5), have disturbed these air gaps, they may be readjusted by removing the dowel pins from the pole pieces Y (Figure 3-1), and loosening the two fillister head screws which fasten each pole piece to backstraps T. After the air gaps have been re-adjusted and the screws tightened, the joint must be redoweled. This is done by drilling two new (0.098 inch) No. 40 drill size holes through each pole piece 1/8 inch into backstrap T, and inserting the dowel pins which were removed previously.

3.6 ARMATURE STOPS

Before assembling the top case to the mechanism, the setting of the armature stops should be checked and necessary readjustments made. Counterweight arms F (Figure 3-4) limit the movement of the armature by means of adjustable stops G. When adjusting the stops G, the nut lock K must be removed. With the center of the middle roundel in line with the centerline of the mechanism, counterweight arms F should just touch both their respective back stops and roller on the operating studs I, which are mounted on the armature pole shoe. The top stops G should be set to limit the rotation of the armature so that the centers of the outer roundels will be in line with the centerline of the mechanism at the end of their respective strokes. The setting and checking of these stops can be facilitated by use of a simple gage which when clamped to the top of the mechanism will locate, at the height of the roundels, a pointer which is in line with the center-line of the mechanism.

After stops have been set mechanically they should be checked electrically to assure the vane will assume its correct position under operating conditions. This check is made by temporarily attaching a set of permanent magnets to the mechanism and applying energy of each polarity to the coils. After this check remove the magnets, apply nut locks K and tighten lock nuts J.

3.7 TOP CASE, LENSES AND ROUNDELS

Before installing the top case, inspect the colored glass roundels in the spectacle to see that they are not broken and are free from scratches or other defects which may interfere with the passage of the light beam through them. In general, small scratches are not objectionable except in the center of the roundel where the light beam is concentrated. Check to see that the respective colored roundels are in their proper location and that the spectacle and its supporting arm have not been bent or distorted during the repair of the mechanism.

See Service Manual 5461 for instructions for applying conical roundels.

The mechanism is now ready to have the top case attached. The case should be inspected to see that the lens or front cover glass is clean and undamaged, and that the inside of the case is clear of dirt and other foreign particles. At this time, the lacing on the wire leads should be checked and replaced if necessary. The two coil leads should be laced in with the contact leads on the right hand side.

Attach the top case by installing the four screws B (Figure 3-3), training the leads up and through the terminal board opening. Screws B must be tight. The two screws which are inserted from the bottom are secured with lock washers. The two screws which are inserted from the top may be secured by prick punching the threads when they come through the bracket on the bottom side. If the threads do not extend a sufficient distance for prick punching they should be replaced with two 1/4 inch - 20 x 3/4 inch hex head steel cap screws. After the top case has been attached, check the clearance between the spectacle and back surface of the conical section which extends into the inside of top case from the front. This clearance should be 1/4 inch when each roundel is in the center. Also check to see that the roundels are concentric with the 11/16 inch hole in the conical section through which the light beam passes. This check should be made for the middle and both energized positions. Slight readjustment of the armature stops may be made if found necessary. Variations in the vertical position of the roundels and in the 1/4 inch clearance may be corrected by bending the spectacle supporting vane.

3.8 WIRING

The internal wires should be attached to the binding posts on the back terminal board in accordance with the wiring diagram shown in Figure 2-1 or 2-2, whichever applies to the particular unit. These two diagrams are similar except for terminal designation and the manner in which coil leads are connected. Check to see that the small carborundum block is in position between the coil terminals on the back of the board.

This block acts as a shunt lightning arrester for the coil and is secured by two clips under the coil lead eyelets. With the permanent magnet field temporarily attached to the mechanism, apply voltage of polarity shown in the corresponding diagram, to the coil binding posts. The armature should rotate in the direction to position the proper roundel in the center. This should be the left hand roundel for signals per Figure 2-1, and the right hand roundel for signals per Figure 2-2. If the direction of rotation is incorrect, reverse the coil leads on the terminal board. Finally, attach the terminal board to the top case applying between them a thin film of black insulating varnish which has been allowed to thicken.

3.9 REFLECTOR ASSEMBLY

The reflector and lamp socket assembly should be removed from its retaining ring and examined to see that the glass reflector and its reflective backing are in good condition. The retaining ring should be examined and the glass window cleaned. If there are any cracks or heavy scratches in this window, it should be replaced. Install the retaining ring in the top case, placing a thin film of thickened insulating varnish between it and the top case. Make sure that the sealing screw with the hole through the head is placed on the left side. On units equipped with (or to be equipped with) plug couplers, the plug coupler latch is attached under the head of the lower retaining ring screw. Insert the reflector and socket assembly in the retaining ring and attach the lamp leads to their binding posts on the front of the terminal board. Each refelector assembly is labeled on the back with the designation "H-2". When installing, check to see that this designation corresponds to the type of unit to which it is being assembled. Should the reflector or socket be broken or damaged it should be replaced. If facilities are available, socket readjustments should be made as outlined in Section 3.15. If facilities are not available, the reflector assembly should be returned to the factory for repair and adjustment.

3.10 CONTACT ADJUSTMENT

Contacts may now be set and adjusted. All contacts as shown in Figure 3-4 should have at least 0.050 inch opening. With the front contacts fully compressed, and counterweight arm against the front stop, the silver to silver impregnated graphite front contacts should have a slide of 1/32 inch. With the counterweight against the back stop and the back contacts fully compressed, the silver to silver back contacts should have a slide of 1/64 inch. With the back contacts just open, there should not be more than 1/8 inch of the outer roundel showing in the opening in the case for the light beam. The contact fingers should be in line, and with contacts fully compressed the contacts should bear squarely on the contacting surface.

Silver members should be carefully cleaned, in accordance with contact cleaning Service Manual 4560, before contacts are adjusted. Best service is obtained from a contact surface which is highly polished. Care should be exercised in selecting a polishing agent to secure one which does not scratch the surface of the silver, or leave a residue which will set up corrosion. The polishing operation should be done by stroking in the direction of slide.

The silver impregnated carbon tips should be cleaned by filing lightly in the plane parallel to the spring. An extremely fine file should be selected for this cleaning. After filing, it is advisable to remove the loose graphite particles by pulling a strip of clean bond paper through the contact space against the tip. To avoid introducing particles of paper, the strip should be wider than tip and the ends or sides of paper should not be passed between contact members.

Cleaned contact resistance, taken after adjustment and after calibration of the unit, should be less than the following:

Silver to silver	0.030 ohm
Silver to graphite	0.750 ohm
Silver to silver impregnated graphite	0.100 ohm

3.11 PERMANENT MAGNET ASSEMBLY

As previously stated, the individual permanent magnets have been stamped with a letter N at the end which attracts the South seeking pole of a compass.

1. Separate the Alnico magnet from each pair and assemble magnet O, clip N, screw P, and nut M, as shown in Figure 3-7, with the nut started on the screw by only two or three threads.

2. Assemble to each side of the operating unit one magnet assembly as described above. Make certain that the marked end of the Alnico magnet is positioned up and the magnet is assembled on the side of the slotted spacer, away from the field pole pieces and armature pole shoe as illustrated in Figure 3-7. Tighten the magnet assembly until the clip is 1/32 inch from the surface of the magnet.

CAUTION

Breakage of the magnet may result if the clip is tightened against the surface of the Alnico magnet.

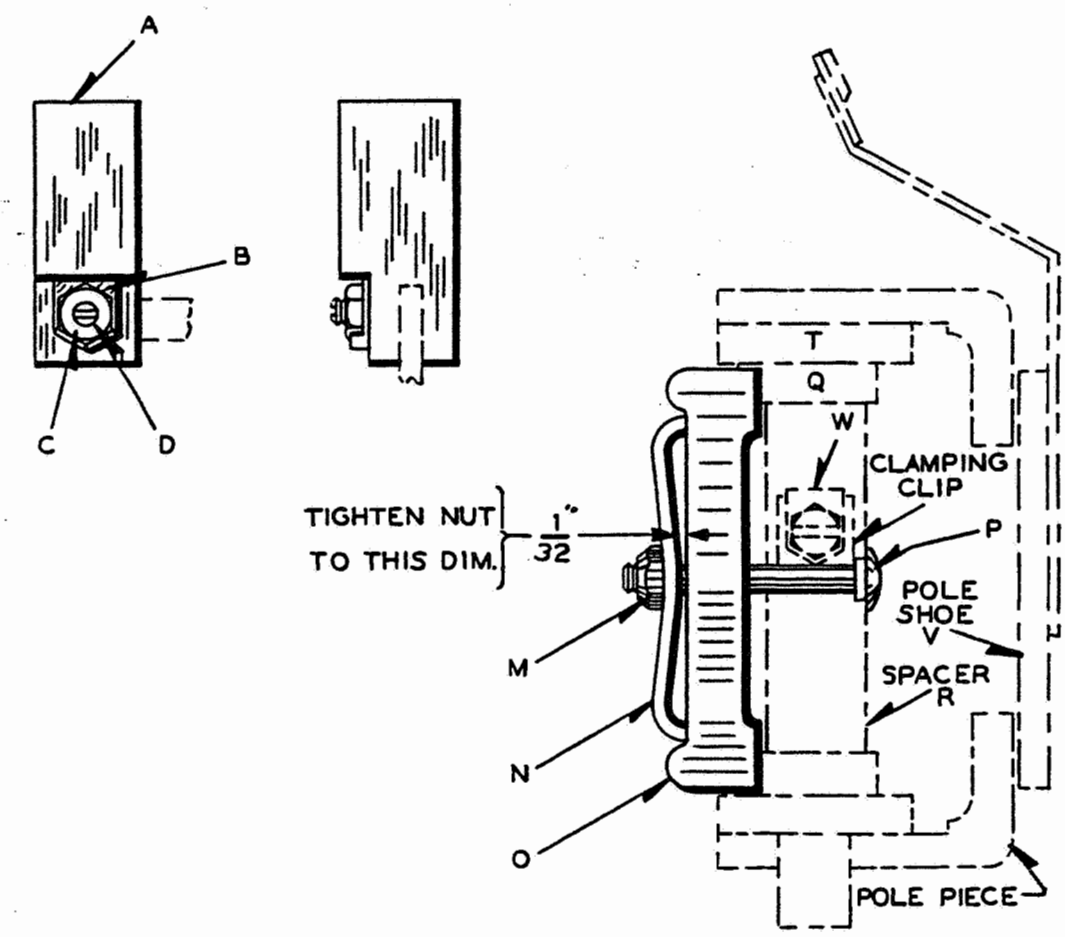

Figure 3-7. Assembly of Alnico Magnet

After magnets are in place, attach the two retaining clips to the spacer blocks and lock them with lock washers. The magnets should be the last part assembled to the unit before calibration and, until calibration has been done, the mechanism should have a clean plastic cover placed on it. This is done to prevent the possible introduction of dirt or small particles of iron into the relay by the magnets before it can be sealed.

The condition of the charge on the permanent magnets is important, as it affects the calibration of the unit. The charge can be checked during calibration as described in Section 3.12. If the operating values, as specified in Table I, cannot be met by adjustment of counterweight L (Figure 3-4), the charge in the permanent magnets is incorrect. A high pick-up, together with a high drop-away and minimum counterweight adjustment, is an indication of low charge on the magnets. In this case, the magnets should be replaced with new ones which have been charged and checked at the factory. The magnets which were removed, may be returned to the factory for checking and recharging. For satisfactory results, the methods and necessary equipment for checking and charging magnets in the laboratory are not economically adaptable to field use. However, in repair shops where test equipment is available for measurement of the charge in a magnet, it is suggested that a pair of magnets of the type under test be obtained from the factory. These magnets should be laboratory calibrated before leaving the factory and thus can be used as a comparision standard for testing magnets in field repair shops.

3.12 CALIBRATION

The operating unit should be calibrated to meet the requirements of pick-up and drop-away shown in Table I. The operating values are varied by adjustment of the counterweights L (Figure 3-4). When adjusting the counterweights L along the counterweight arms F, surface L1 (Figure 3-4) on the counterweight must not be closer than 1/8" from surface F1 on the counterweight arms.

3.12.1 Drop-Away

Apply voltage equal to twice the pick-up value shown in the table, and then gradually reduce the voltage until both counterweight arms F (Figure 3-4) just touch the rollers I. This value of voltage is the drop-away, and should be not less than the value indicated in Table I.

A smooth travel of the armature from the pick-up to the drop-away position, together with a satisfactory drop-away value, indicates that the moving parts are free from friction.

There may be some slight additional movement of the roundel spectacle when the voltage is further reduced. This is due to a tendency of the armature to lift off the knife-edge slightly when picking up, and then to settle back again when the voltage is reduced, which may not occur until below the drop-away point defined above. The clearance in the knife-edge bearing is such that this lift is controlled within very narrow limits and has no detrimental effect on the operation of the mechanism, or the proper position of the roundels.

If the armature has not settled back preliminary to the drop-away point, there will be noted a slight opening between the counterweight arm and its back stop. Further reduction in voltage should result in the counterweight arm coming against the stop at or before zero voltage.

3.12.2 Pick-Up

Immediately after measuring the drop-away, the circuit should be opened for one second. Apply voltage in the same direction. Gradually increase the voltage until the counterweight arm just touches the upper stop. This voltage is the pick-up value and should not exceed the value for pick-up given in Table I.

The polarity of the voltage on the operating coil should be reversed. Apply a voltage twice the pick-up value indicated in Table I to the unit. Measure the drop-away and pick-up values as outlined in the preceding paragraphs. NOTE: An adjustable resistance connected as a potentiometer is considered the best method of varying the voltage.

3.12.3 Reverse Pick-Up

1. Apply a voltage equal to twice the pick-up value indicated in Table I, to the armature. Reduce the voltage until the armature comes to the central or drop-away position. Open the circuit. Apply voltage in the reverse direction. Gradually increase the voltage until the counterweight arm just touches the upper stop. This voltage value is the reverse pick-up and shall not exceed 5.4 volts for 250 ohm untils and 7.9 volts for 500 ohm units.

2. Continue increasing the voltage to twice the amount required for pick-up and then reduce the voltage until the armature comes to the drop-away position. Open the circuit, reverse the polarity, and gradually increase the voltage until the counterweight arm touches the upper stop. The value of reverse pick-up for this side must not exceed the values given above for Reverse Pick-Up, and in addition, must not vary more than 0.3 volt from the reverse pick-up already taken for the other side.

Table I. Operating Values (Shop Test)

Type of Unit	Ohms Res. Armature	Armature Drop-Away	Volts Pick-Up	Armature Volts On Name Plate
With Contacts	250	2.0	5.2	5.5
Without Contacts	250	2.6	5.2	5.5
With Contacts	500	3.0	7.6	8.0
Without Contacts	500	3.8	7.6	8.0

The calibration values indicated are the shop values used when the operating units were manufactured. Units that are overhauled should be adjusted to meet these calibration values.

3.13 INSPECTION AND SEALING

3.13.1 Inspection

A. Before sealing the operating units make certain that:

1. Screws holding counterweights are tight and properly locked.

2. Screws B (Figure 3-3) are tight and are either locked or pricked punched as specified under assembly.

3. Screws holding contact springs are tight and properly locked.

4. Screws holding contact spring boards to unit are tight and properly locked.

5. Screws holding bearing caps are tight.

6. Pivot screws for counterweight arms are tight in the bracket.

7. All split pins are properly spread and they do not bind in center member of pivoted joint.

8. Counterweight arms operate freely, have proper clearance from adjacent parts, and properly engage the stops with sideways motion taken up.

9. Top of spectacle can be moved only a slight amount without lifting the counterweight.

10. Unit is free from all dirt and foreign material.

11. Wiring and polarity checks with wiring diagram (Figure 2-1 or 2-2).

12. Case and all glass roundels, covers, and lenses are cleaned and polished.

13. Name plate has piece number, serial number, resistance, and armature volts stamped on it. The armature volts marked on name plate should correspond to those in Table I.

3.13.2 SEALING

The plastic cover should be fastened securely in place, care being taken to locate it so that it will bear evenly on the gasket and will clear all operating parts.

On units having strap support for the cover, this strap should be flat against the bottom, with cork strips in place between it and the curved portion of the cover. The strap should be drawn up evenly on each side by its tightening screws. The two sealing plates for the support strap may then be slid into place and the unit sealed as follows:

Lead seals are applied to both support strap sides, both sides of lens or front cover glass housing, and between the reflector retaining rings and its left hand screw. Wax seals are applied to the two holes in the terminal board to cover the heads of screws fastening it to top case.

3.14 FINAL INSPECTION

After sealing the unit, a visual inspection should be made to see that its parts have not been damaged in applying the cover and that the cover has proper clearance from all operating parts.

See that the reflector is tight in the reflector holder. Check holding springs to see they have sufficient tension to properly seat the reflector holder.

3.15 ADJUSTMENT OF LAMP SOCKET

If the adjustment of the lamp socket has been disturbed, readjustment will be necessary. To do this, the operating unit is placed in a standard high signal case mounted on a support approximately 50 feet from a vertical white screen in a dark room. The screws supporting the unit in the signal case should be tight, and the pads on the unit tight against the corresponding pads on the signal case. The screen should have two crosses, one 7-3/8 inch above the other on the same vertical line (refer to Figure 3-8). Adjust the position of the signal case so the sighting device M of the signal is aligned on the upper cross N. Tighten the adjusting nuts to hold the case in place. Place a standard lamp O in the socket and apply, approximately, its rated voltage. The lamp used as a "standard" should be obtained from the factory to insure careful selection for proper filament shape, size, and axial alignment.

Adjust the nuts P on the screws supporting the lamp socket until the light beam from the signal strikes the screen and is centered on the lower cross Q. This aligns the light beam parallel to the sighting device M on the signal case. All three nuts P on the studs supporting the lamp socket should be adjusted until a light beam of maximum intensity is obtained, that is, until the image on the screen is of smallest possible size, keeping the image centered on the lower cross. Tighten the jam nuts and apply solder between all adjusting nuts, lamp socket supporting plate and jam nuts to seal the adjustment.

3.16 INSTALLATION OF SHIPPING SCREWS

On recently manufactured units equipped with the plastic cover, provision has been made for the application of shipping screws through holes in the cover to prevent damage to the unit during shipment (see Figure 3-9). The soft rubber washer A is applied next to the head of the shipping screws B. Insert screws B through holes C of the plastic cover D and screw the threaded ends into the hold-down brackets E of the counterweight arm and contact anvil F. Tighten the shipping screws to prevent movment of the counterweight arm assembly.

CAUTION

Excessive tightening may result in damage to the plastic cover.

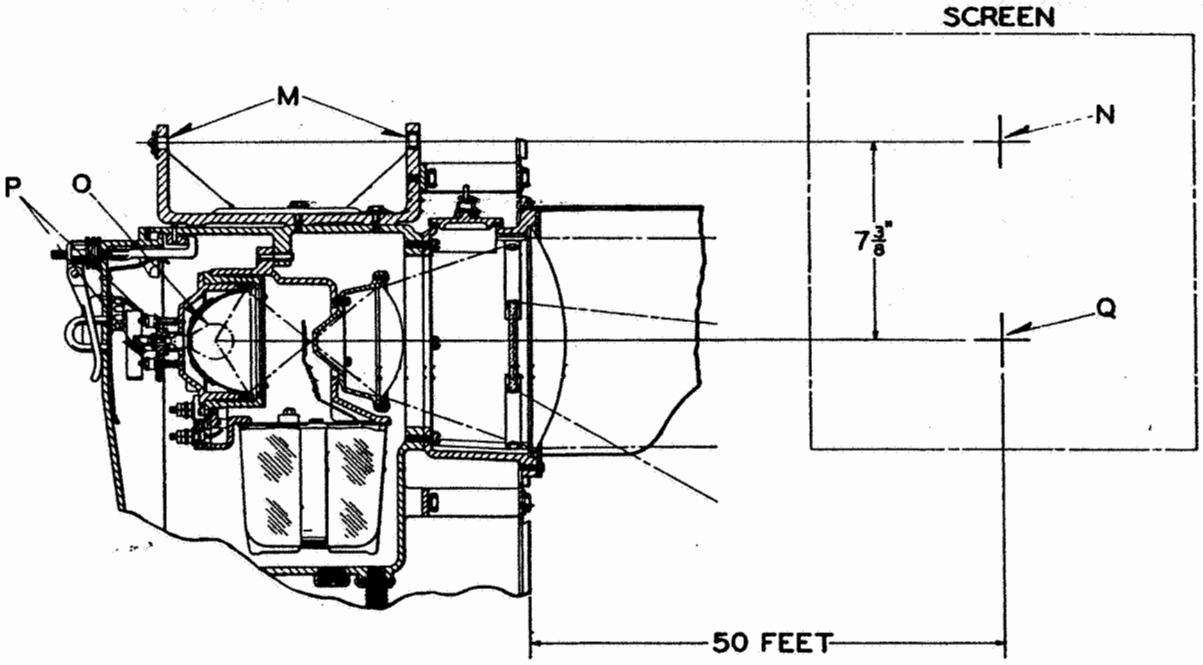

Figure 3-8. Layout for Readjusting the Lamp Socket

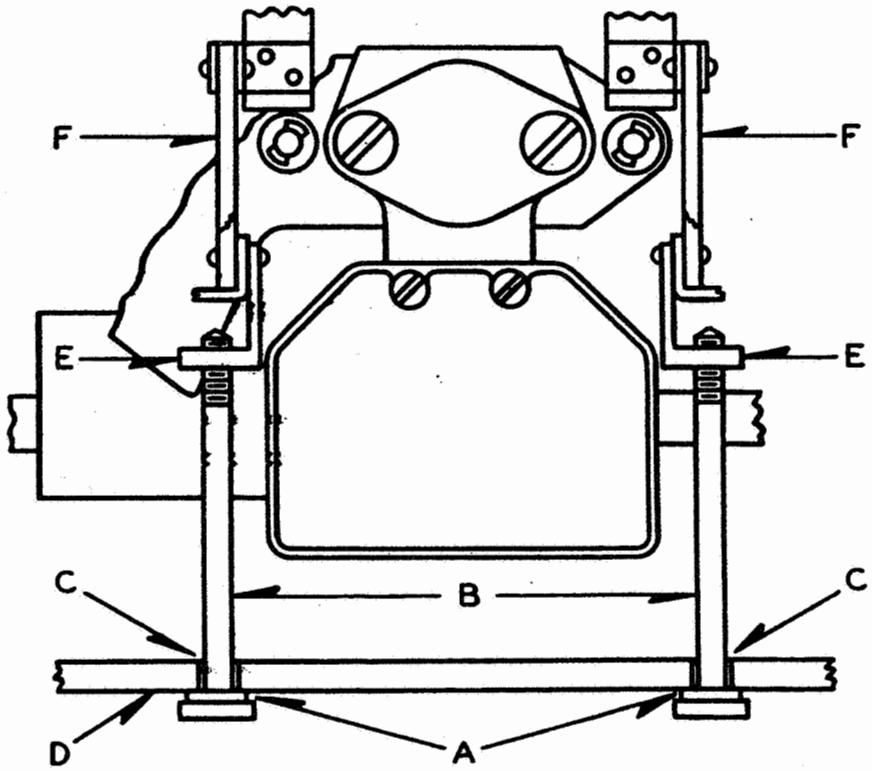

Figure 3-9. View Showing application of Shipping Screws

SERVICE MANUAL 5034

PARTS LIST

H-2

SEARCHLIGHT SIGNALS

UNION SWITCH
& SIGNAL INC.
A member of the ANSALDO Group

5800 CORPORATE DRIVE
PITTSBURGH, PA 15237

April, 1989
ID0202F/DN0059F
A-4/89-100-2347-1

COPYRIGHT 1989, UNION SWITCH & SIGNAL INC
PRINTED IN USA

HIGH SIGNAL CASE FEATURES

Ref.	Description
A	Hood
B	Close-Up Prism
C	Adjusting Bracket (For side of mast mount)
D	Adjusting Bracket (For front at top of mast mount)
E	2" Street Ell, 45°
F	2" Street Ell, 90°

HIGH SIGNAL CASES

Part No.	Feature Ref.
N451353-0601	A, B, D, E
N451353-0602	A, B, C, F
N451353-0603	A, D, E
N451353-0604	A, C, F
N451353-0605	A, B, E
N451353-0611	B, E

DWARF SIGNAL CASE FEATURES

Ref.	Description
A	Hood (Short)
B	Hood (Standard)
C	Jake Connector
D	Sighting Bracket
E	Adjusting Bracket
F	Close-Up Prism
G	Close-Up Prism In Phankill
H	Phankill Unit

DWARF SIGNAL CASES (1 UNIT)

Part No.	Feature Ref.
N451353-0802	A, C, D, F
N451353-0805	A, C, G, H
N451353-0806	B, C, D, G, H
N451353-0809	A, C, F
N451353-0813	A, C, E, F
N451353-0814	B, D, E, G, H
N451353-0815	B, D, E, G, H
N451353-0817	A, C, G, H
N451353-0820	B, D, E, G, H
N451353-0821	B, C, D, G, H
N451353-0823	B, C, F

DWARF SIGNAL CASES (2 UNIT)

Part No.	Feature Ref.	
	Upper Unit	Lower Unit
N451353-1101	A, C, F	A, C, F
N451353-1106		A, C, F
N451353-1111	A, C, G, H	A, C, G, H

PARTS LIST

Signal Cases (Without Operating Unit). See Figure A-1.

ITEM	DESCRIPTION	PART NUMBER
1	Adjusting Bracket, for side or front at top	M147483-001
2	Adjusting Bracket, for side or front	M162983-001
3	Sight	N152843-001
4	Bracket (P/O Item 3)	M152842-001
5	Sight Tube (P/O Item 3)	M152945-001
6	Screw, 8-32 x 3/8, Rd. Hd. SS (P/O Item 3)	J525261
7	Sight Plate (P/O Item 3)	M152811-001
8	Clamp (P/O Item 3)	M413939
9	Screw, 5/16-18 x 1, Hex	J500080-0116
10	Washer, 5/16, Galvan.	J475132-0113
11	Pin	M038851-001
12	Pin, Roll	J487012
13	Adapter	M167996-001
14	Screw, 5/16-18 x 1	J522171-0116
15	Washer, 5/16", Shkprf.	J475138-0112
16	Prism Holder	N264109
17	Screw, 10-32 x 1/4, Rd. Hd. SS	J525052
18	Prism, Light Deflecting	J531601
19	Cover	M263154-001
20	Bolt, 5/16-18 x 1-1/4, Hex	J460117
21	Gasket, Cork	J047398
22	Lens, Clear, 8-3/8"	J053746
23	Lens Ring, Complete	N260573-001
28	Screw, 10-32 x 3/8, Rd. Hd.	J525281-0106
29	Hood, Standard (16")	M184414
29	Hood, Short (10-1/2")	M065898
30	Nut, 3/4-10, Hex	J480210-0107
31	Washer	M146404
32	Bracket, Support	M144205-001
33	Pin, SS	M144627-001
34	Washer, Plt. Stl.	J047639
35	Cotter, 1/8 x 3/4	J048691
36	Washer	M080821-001
37	Nut, 1"-8, Hex, Stl.	J480210-0159
38	Bolt, 1"-8 x 4-1/2, Sq. Hd.	J466074-0136
39	Bushing, 3/4 Conduit	J069676
40	Ventilator	M213628
41	Nipple	M213626-001
42	Screw	M065018-001
43	Street Ell, 2", 90°	J032490
44	Street Ell, 2", 45°	J032603
45	Protector, Pipe Thread	J032927
46	Operating Unit (See following Parts List)	--

Signal Cases (Without Operating Unit) (Cont'd.)

ITEM	DESCRIPTION	PART NUMBER
47	Case and Door Assembly (For use in N451343-0601 thru -0605, -0611, -0806, -0813, -0814, -0815 and -0820)	N451353-0102
47	Case and Door Assembly (For use in N451343-1101, -1106 and -1111)	N451353-0104
47	Case and Door Assembly (For use in N451343-1101, and -1111)	N451353-0110
48	Case, P/O Item 47	M186742-001
48	Case, P/O Item 47 (Used on N451353-0104)	M158976-001
49	Stud, P/O Item 47	M451354-0102
49	Stud, P/O Item 47 (Used on N451353-0102)	M451354-0101
50	Pin, 1-1/4 LR, Elastic Stop (P/O Item 47)	J048714
51	Pin, 7/16 (P/O Item 47)	M144627-002
52	Latch Block (P/O Item 47)	M451354-0201
53	Cover (P/O Item 47)	M144204-001
54	Latch Lock (P/O Item 47)	M451354-0501
55	Spring (P/O Item 47)	M410529
56	Staple (P/O Item 47)	M451354-0301
57	Hasp (P/O Item 47)	M451354-0403
58	Hasp (P/O Item 57)	M451354-0402
59	Nut Latch (P/O Item 57)	M451354-0401
60	Pin (P/O Item 57)	M216596-001
61	Packing, Torch Wick (P/O Item 47)	N380686
62	Washer (P/O Item 47)	M094096-001
63	Washer, 1/2 Stl. Spr. (P/O Item 47)	J475138-0115
64	Gasket, Leather (P/O Item 47)	J047008
65	Spring Clip (P/O Item 47)	M238336

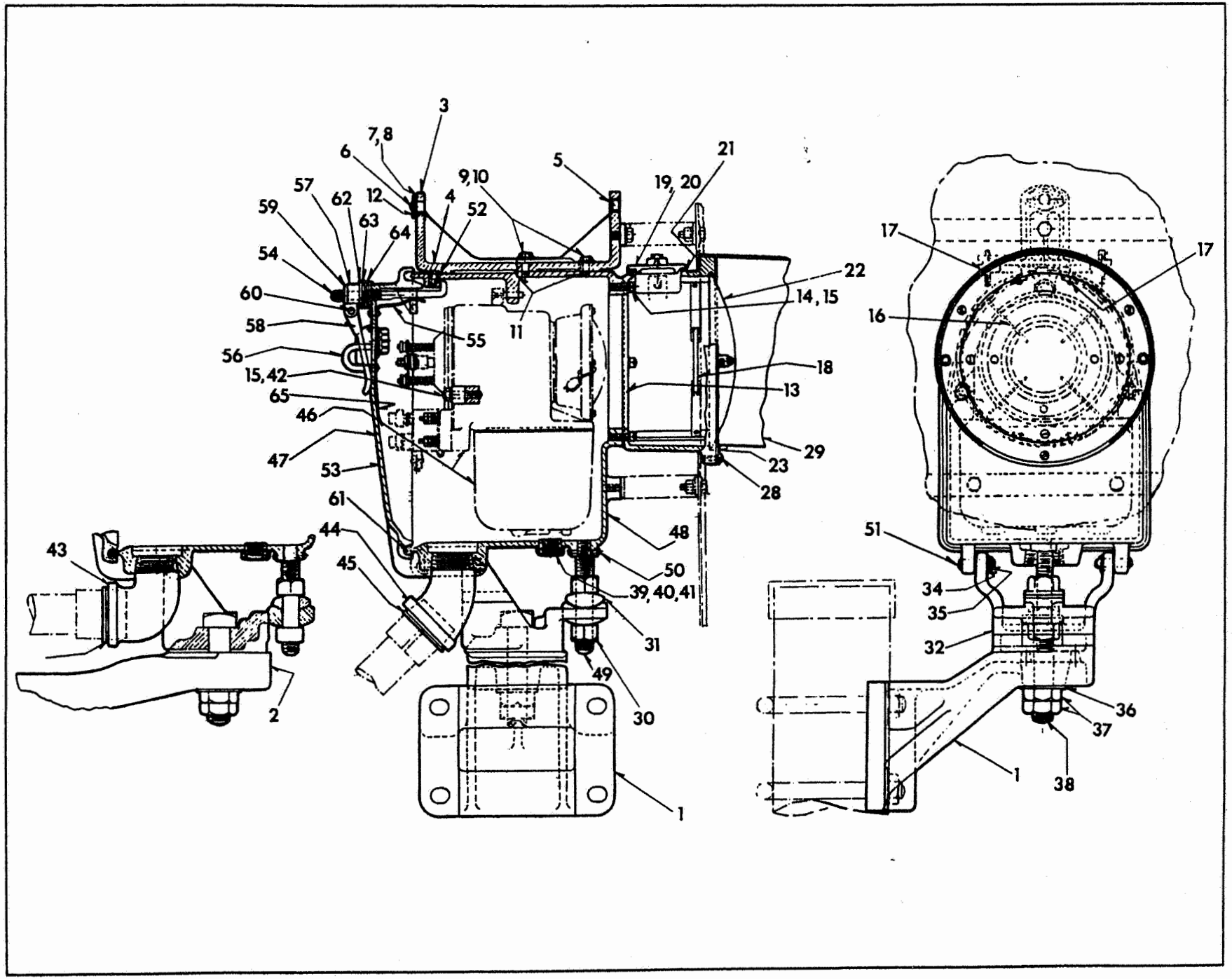

Figure A-1. Signal Case Assembly

PARTS LIST

Operating Unit (See Figure A-2)

Part No.	Coil Ohms	Plug Coupler	Roundels		
			Left	Middle	Right
N290148	250	With	Yellow	Red	Green
N290150	250	Without	Yellow	Red	Green
N294139	500	Without	Yellow	Red	Green
N294165	250	With	Green	Red	Yellow
N294167	500	With	Yellow	Red	Green
N304512	250	Without	Yellow	Red	Lun. Wh.
N304743	250	Without	Lun. Wh.	Red	Red
N311459	250	With	Lun. Wh.	Red	Red
N432812	250	With	Lun. Wh.	Red	Green
N432971	250	With	Yellow	Red	Red
N436864	250	Without	Yellow	Red	Red
N436865	250	Without	Green	Red	Red
N437146	250	With	Green	Red	Lun. Wh.
N437604	250	Without	Lun. Wh.	Red	Green
N438302	250	Without	Lun. Wh.	Red	Yellow

Item	Description	Part No.
1	Seal, Lead	J079351
2	Plug Coupler	N213282
3	Body, Plug Coupler (P/O Item 2)	J070214
4	Spring Contact (P/O Item 2)	M328970
5	Terminal Post (P/O Item 2)	M118364
6	Connector (P/O Item 2)	M213267
7	Washer (P/O Item 2)	J047818
8	Nut, 14-24, Hex, Br. (P/O Item 2)	J480300
9	Nut, Molded (P/O Item 2)	J048300
10	Terminal Post (P/O Item 2)	M141688
11	Receptacle (P/O Item 2)	N213371
12	Retaining Spring	N213263
13	Roundel, Red	N413946
	Roundel, Green	N413965
	Roundel, Yellow	N413966
	Roundel, Lunar White	N413967
14	Roundel, Same as Item 13	--
15	Roundel, Same as Item 13	--

Item	Description	Part No.
16	Case, Plastic	M333006
17	Cover, Complete	N169547
18	Cover (P/O Item 17)	M169546
19	Stud (P/O Item 17)	M143663
20	Adapter (P/O Item 17)	M167997
21	Screw (P/O Item 17)	M344559
22	Washer, Lock (P/O Item 17)	M344566
23	Reflector Assembly, Comp.	N148169
24	Reflector Subassembly (P/O It. 23)	N149107
25	Reflector (P/O Item 24)	M436848
26	Holder (P/O Item 24)	M149106
27	Gasket (P/O Item 24)	J047303
28	Roundel Ring (P/O Item 24)	M149095
29	Clip (P/O Item 24)	M410563
30	Coil Spring (P/O Item 24)	M149104
31	Lamp Socket (P/O Item 24)	N214307
32	Nut (P/O Item 24)	M103818
33	Nut (P/O Item 24)	M001515
34	Screw, 4 x 1/4, Rd. Hd. (P/O It. 24)	J052665
34A	Flexible Lead (P/O Item 24)	N216668
35	Washer (P/O Item 24)	M151300
36	Washer (P/O Item 24)	M106871
37	Mounting Bracket (P/O Item 24)	N109360
38	Shield (P/O Item 24)	N216646
39	Screw, 10-32 x 5/16 (P/O Item 24)	J051665
40	Washer, #10 Lock (P/O Item 24)	J047733
41	Stud (P/O Item 24)	M149105
42	Washer, #8 Lock (P/O Item 24)	J047681
43	Retaining Ring (P/O Item 23)	N145174
44	Ring (P/O Item 43)	M144021
45	Spring (P/O Item 43)	M410531
46	Glass (P/O Item 43)	J053606
47	Lens (P/O Item 43)	M146718
48	Screw, 4 x 1/4 Rd. Hd. (P/O It. 43)	J052665
49	Gasket (P/O Item 43)	J047452
50	Nut M208900	
51	Lock Nut	M029353
52	Terminal Board	N320312
53	Lens, Clear Plano-Convex	J053745
54	Screw	M153231
55	Lock Bolt	M054713
56	Lens Ring	M169544
57	Instruction Plate	J063888
58	Gasket, Felt	J047120
59	Cover Glass	N237234
60	Spacer	M334551

Item	Description	Part No.
61	Strip	M237221
62	Locking Plate	M237220
63	Gasket	M240902
64	Arrester, Carborundum	J070595
65	Connector Plate	M410561
66	Screw, 10-32 x 5/8, Fil. Hd.	J051299
67	Screw, 10-32 x 1/2, Fil. Hd.	J052355
68	Screw	M291449
69	Screw, 10-32 x 1/4, Rd. Hd. Brs.	J051664
70	Screw	M291572
71	Screw, 8-36 x 15/16, Fil. Hd.	J052075
72	Screw, 4-40 x 1/4, Rd. Hd. Brs.	J051615
73	Screw	M291450
74	Magnet	M315679
75	Clip	M315920
76	Bolt, Carriage	M437061-001
77	Nut, 10-32, Elastic Stop	J048143
78	Gasket, Rubber	J047146
79	Washer, Rubber	M330411
80	Washer	M049593
81	Screw, 2 x 1/8, Rd. Hd.	J525029
82	Operating Mechanism, 250 Ohm (See following Parts List)	N290146
82	Operating Mechanism, 500 Ohm (See following Parts List)	N294130
83	Resistor, Variable, 1 Ohm, 2.5 A max.	M109385
	" " 2 Ohm, 1.7 A max.	M109386
	" " 5 Ohm, 1.1 A max.	M109387
	" " 10 Ohm, 0.75A max.	M109388

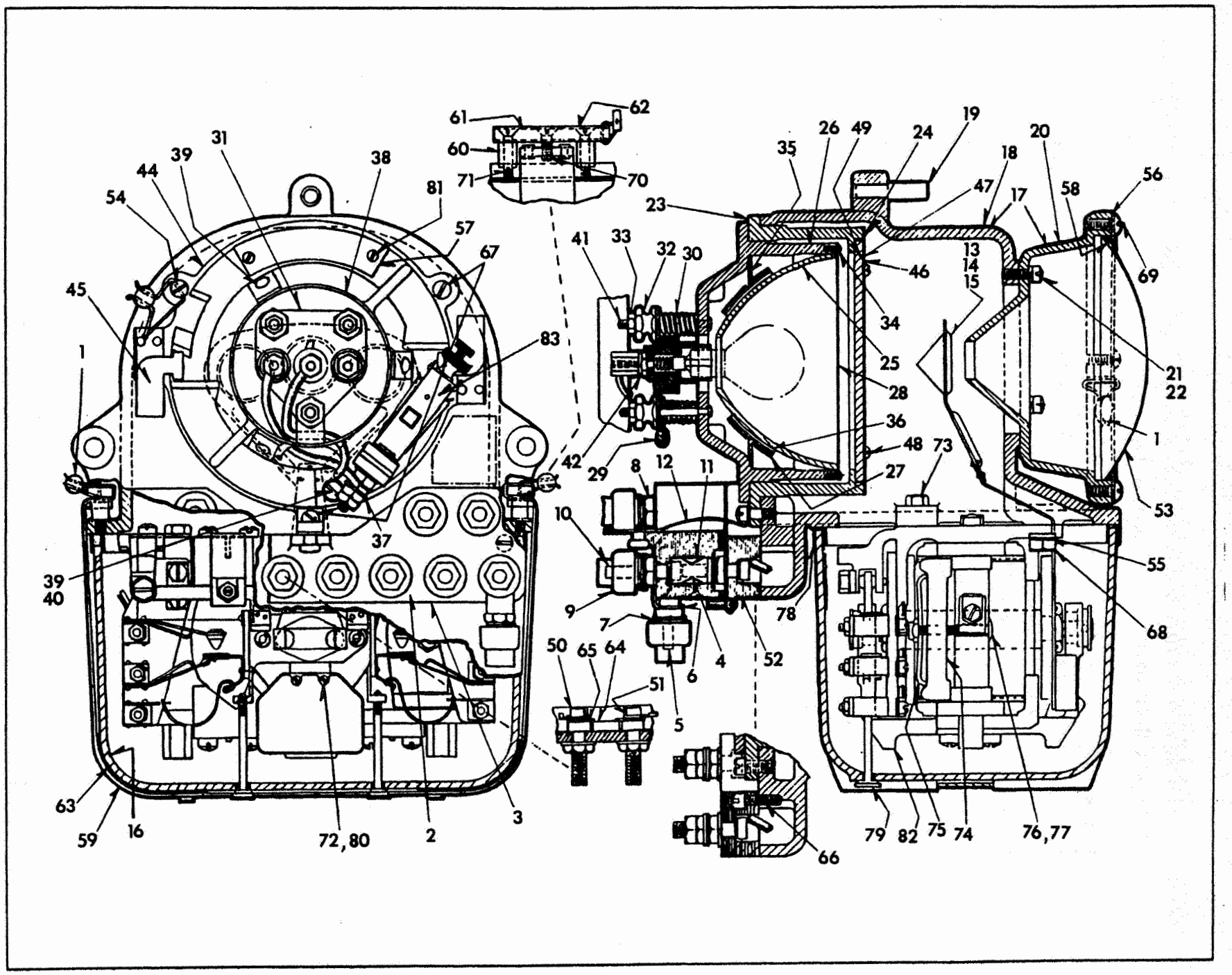

Figure A-2. Operating Unit Assembly

PARTS LIST

Operating Mechanism (See Figure A-3)

ITEM	DESCRIPTION	PART NUMBER
1	Magnet Assembly	N166446
2	Spacer (P/O Item 1)	M166628
3	Lower Backstrap (P/O Item 1)	M141663
4	Backstrap (P/O Item 1)	M141662
5	Pole Piece (P/O Item 1)	M141670
6	Pole Piece (P/O Item 1)	M142526
7	Screw, 14-24 x 1/2, Fil. Hd. (P/O Item 1)	J052322
8	Screw (P/O Item 1)	M291451
9	Stud (P/O Item 1)	M166987
10	Screw, 14-24 x 1, Fil. Hd. (P/O Item 1)	J052327
11	Pole Piece (P/O Item 1)	M166988
12	Coil Spacer (P/O Item 1)	M141676
13	Armature Bracket	M141711
14	Left Hand Bracket	M141709
15	Bracket	M141710
16	Armature, Complete	M174174
17	Spectacle (P/O Item 16)	N141718
18	Spectacle Head (P/O Item 17)	M223548
19	Spectacle Arm (P/O Item 17)	M141717
20	Clip (P/O Item 17)	M410389
21	Clip (P/O Item 17)	M410391
22	Clip (P/O Item 17)	M410390
23	Double Clip (P/O Item 17)	M410386
24	Pin (P/O Item 17)	J048831
25	Plate (P/O Item 17)	M314669
26	Armature (P/O Item 16)	N169022
27	Pole Piece (P/O Item 16)	M141673
28	Pole Piece (P/O Item 16)	M141674
29	Shaft, Roller (P/O Item 16)	M141714
30	Roller (P/O Item 16)	M332441
31	Pins (P/O Item 16)	M141720
32	Nut (P/O Item 16)	M141713
33	Counterweight (P/O Item 16)	M329984
33A	Pin (P/O Item 16)	J332442
34	Counterweight	M320065
35	Nut, Lock	M157891
36	Screw, 10-32 x 3/8, Hex	J050788
37	Spring Contact Board	N391661
38	Spring Contact Board	N391662
39	Board, Molded Term. (P/O Items 37 & 38)	J077725
40	Contact Spring (P/O Items 37 & 38)	N391671
41	Contact Spring (P/O Items 37 & 38)	N391670
42	Connector (P/O Items 37 & 38)	N391668
43	Washer (P/O Items 37 & 38)	M017376
44	Lock Nut (P/O Items 37 & 38)	M029353

Operating Mechanism Cont'd.

ITEM	DESCRIPTION	PART NUMBER
45	Nut (P/O Items 37 & 38)	M029956
46	Lead (P/O Items 37 & 38)	N142078
47	Screw (P/O Items 37 & 38)	M155958
48	Arm and Anvil	N391665
49	Nut	M208900
50	Nut, Lock	M321513
51	Nut	M141675
52	Screw	M141698
53	Nut, Lock	M160992
54	Nut, Lock	M160993
55	Insulation	M178520
56	Bearing	N191779
57	Cap Bearing	J790039
58	Pin	M057496
59	Screw	M119318
60	Pin	M176319
61	Pin	M037409
62	Pivot Screw	M332443
63	Bolt, Lock	M074798
64	Washer	M169192
65	Washer	M169193
66	Washer	M169674
67	Nut, 10-32 Hex Brs.	J048100
68	Lock Clip	M236708
69	Screw	M216532
70	Nut, Lock	M042239
71	Coil, 500 Ohm	N178942
71	Coil, 250 Ohm	N170724
72	Balls, 1/8, Hoffman St.	J066002
73	Screw, 8-36 x 1/2, Fil. Hd.	J051030
74	Screw, 14-24 x 1/2, Fil. Hd.	J052322
75	Screw, 14-24 x 5/8, Fil. Hd.	J052324
76	Nut Lock	M398622

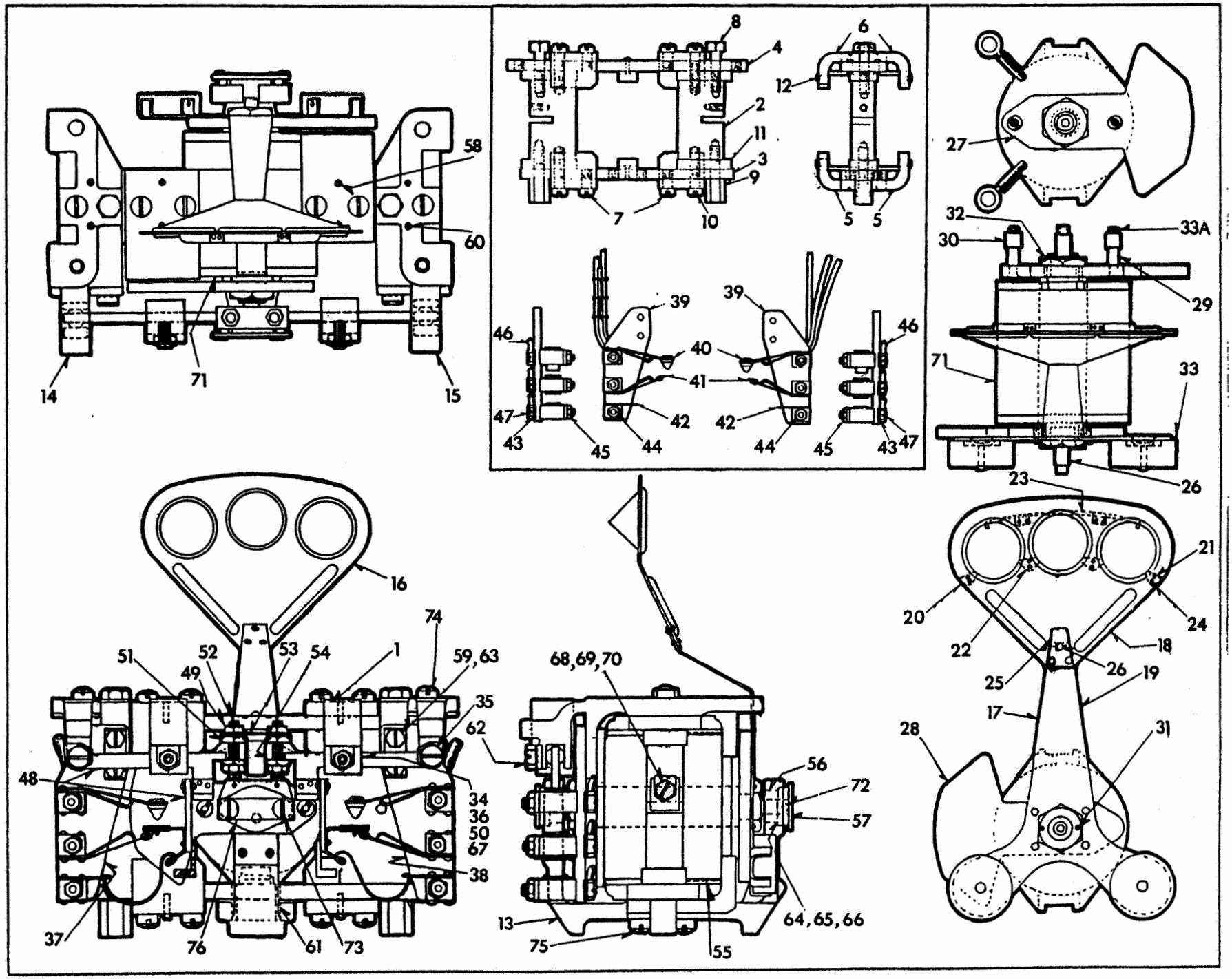

Figure A-3. Operating Mechanism